ATTACHMENT 27

DECINERATION™ SYSTEM DRAWINGS

RD&D TESTING TEAD

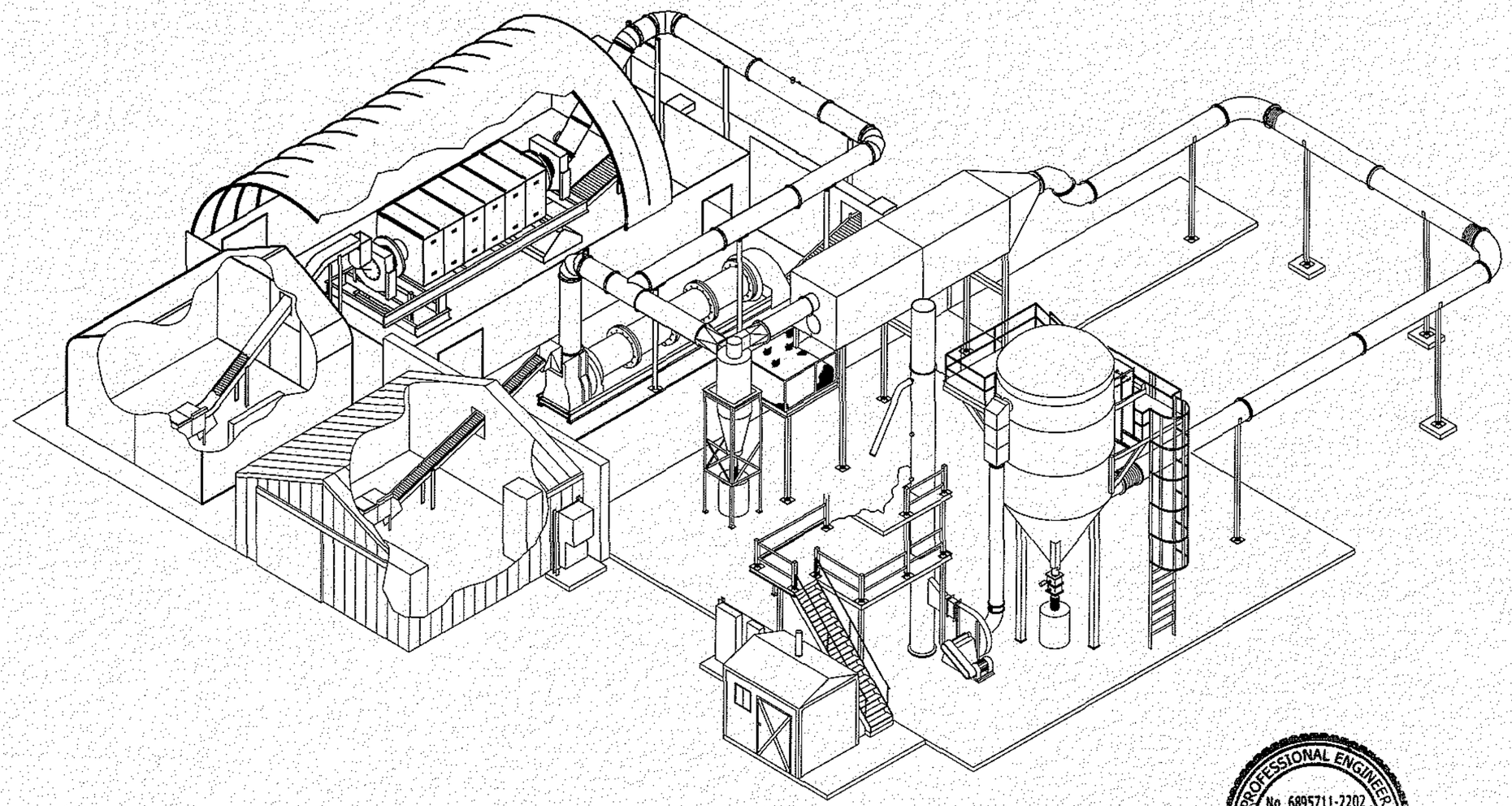

PROFESSIONAL ENGINEER
No. 6895711-2202
DONALD FANNING
10/25/13
STATE OF UTAH

US ARMY

TOOELE ARMY DEPOT

AMMUNITION EQUIPMENT DIRECTORATE

CAGE NO.	DWG. SIZE	DOCUMENT NUMBER	SHT NO.	REV.	NOMENCLATURE
21624	B	USD HWI-PERMIT-00	SHT 1 of 1	A	DATA LIST
21624	B	USD HWI-PERMIT-01	SHT 1 of 1	A	SITE LAYOUT ISOMETRIC GENERAL ASSEMBLY
21624	B	USD HWI-PERMIT-02	SHT 1 of 1	A	SITE LAYOUT GENERAL ASSEMBLY
21624	B	USD HWI-PERMIT-03	SHT 1 of 1	A	SITE LAYOUT VIEW A-A ELEVATION
21624	B	USD HWI-PERMIT-04	SHT 1 of 1	--	SITE LAYOUT VIEW B-B ELEVATION
21624	B	USD HWI-PERMIT-05	SHT 1 of 1	A	SITE LAYOUT VIEW C-C ELEVATION
21624	B	USD HWI-PERMIT-06	SHT 1 of 1	--	AFTERBURNER ASSEMBLY
21624	B	USD HWI-PERMIT-07	SHT 1 of 1	--	CYCLONE ASSEMBLY
21624	B	USD HWI-PERMIT-08	SHT 1 of 1	--	CERAMIC BAGHOUSE ASSEMBLY
21624	B	USD HWI-PERMIT-09	SHT 1 of 1	--	DRAFT FAN SUB-ASSEMBLY
21624	B	USD HWI-PERMIT-10	SHT 1 of 1	--	STACK PLATFORM & BAGHOUSE SUB-ASSEMBLY ELEVATION
21624	B	USD HWI-PERMIT-11	SHT 1 of 1	--	EXHAUST STACK PORT IDENTIFICATION DETAIL
21624	B	USD HWI-PERMIT-12	SHT 1 of 1	--	GAS MONITORING SAMPLE PROBE DETAIL
21624	B	USD HWI-PERMIT-13	SHT 1 of 1	--	CO & O2 MONITORING SAMPLE SYSTEM
21624	B	USD HWI-PERMIT-14	SHT 1 of 1	A	FLOW CONTROL P&ID DIAGRAM
21624	B	USD HWI-PERMIT-15	SHT 1 of 1	A	ENCLOSURE LAYOUT ASSEMBLY
21624	B	USD HWI-PERMIT-16	SHT 1 of 1	--	G213 MASS/ENERGY BALANCE
27344	B	S-110099-01	SHT 1 of 1	--	HARPER FURNACE GENERAL ARRANGEMENT
27344	B	XSP-0008	SHT 1 of 2	--	PIPING & INSTRUMENTATION DIAGRAM - HARPER ROTARY FURNACE
27344	B	XSP-0008	SHT 2 of 2	--	PIPING & INSTRUMENTATION DIAGRAM - HARPER ROTARY FURNACE
27344	B	YRF-0097	SHT 1 of 7	--	HARPER FURNACE ASSEMBLY, RIGHT SIDE VIEW
27344	B	YRF-0097	SHT 2 of 7	--	HARPER FURNACE ASSEMBLY, LEFT SIDE VIEW
27344	B	YRF-0097	SHT 3 of 7	--	HARPER FURNACE ASSEMBLY RIGHT SIDE PLAN VIEW
27344	B	YRF-0097	SHT 4 of 7	--	HARPER FURNACE ASSEMBLY, RIGHT SIDE CUT-AWAY VIEW
27344	B	YRF-0097	SHT 5 of 7	--	HARPER FURNACE ASSEMBLY END VIEW
27344	B	YRF-0097	SHT 6 of 7	--	HARPER FURNACE ASSEMBLY ISOMETRIC ENTRANCE END VIEW
27344	B	YRF-0097	SHT 7 of 7	--	HARPER FURNACE ASSEMBLY ISOMETRIC EXIT END VIEW

PROFESSIONAL ENGINEER
No. 6895711-2202
DONALD FANNING
10/25/13
STATE OF UTAH

REV. A | UPDATES INDICATING AS BUILT SYSTEM. | 23 OCT 2013

PROJ MGR: KURT FRAUGHTON	UNLESS OTHERWISE NOTED ALL DIMENSIONS ARE IN INCHES DO NOT SCALE DRAWING	US ARMY TOOELE ARMY DEPOT AMMUNITION EQUIPMENT DIRECTORATE
AED: DON FANNING	TOLERANCES DECIMAL 2 PLACES ± .01 3 PLACES ± .005 FRACTIONAL ± 1/64 ANGULAR ± 0° 30' BREAK SHARP EDGES AND CORNERS	USD RD&D
SAFETY		USD HWI PERMIT DRAWINGS
FINAL		DATA LIST
NEXT ASSEMBLY	CHECKED BY: Troy Tate	SIZE: B; CAGE NO: 21624; DWG NO: USD HWI-PERMIT-00; MOD
	DRAWN BY: Troy Tate	DATE: 1/28/2013; SCALE: NO SCALE; SHT: 1 of 1

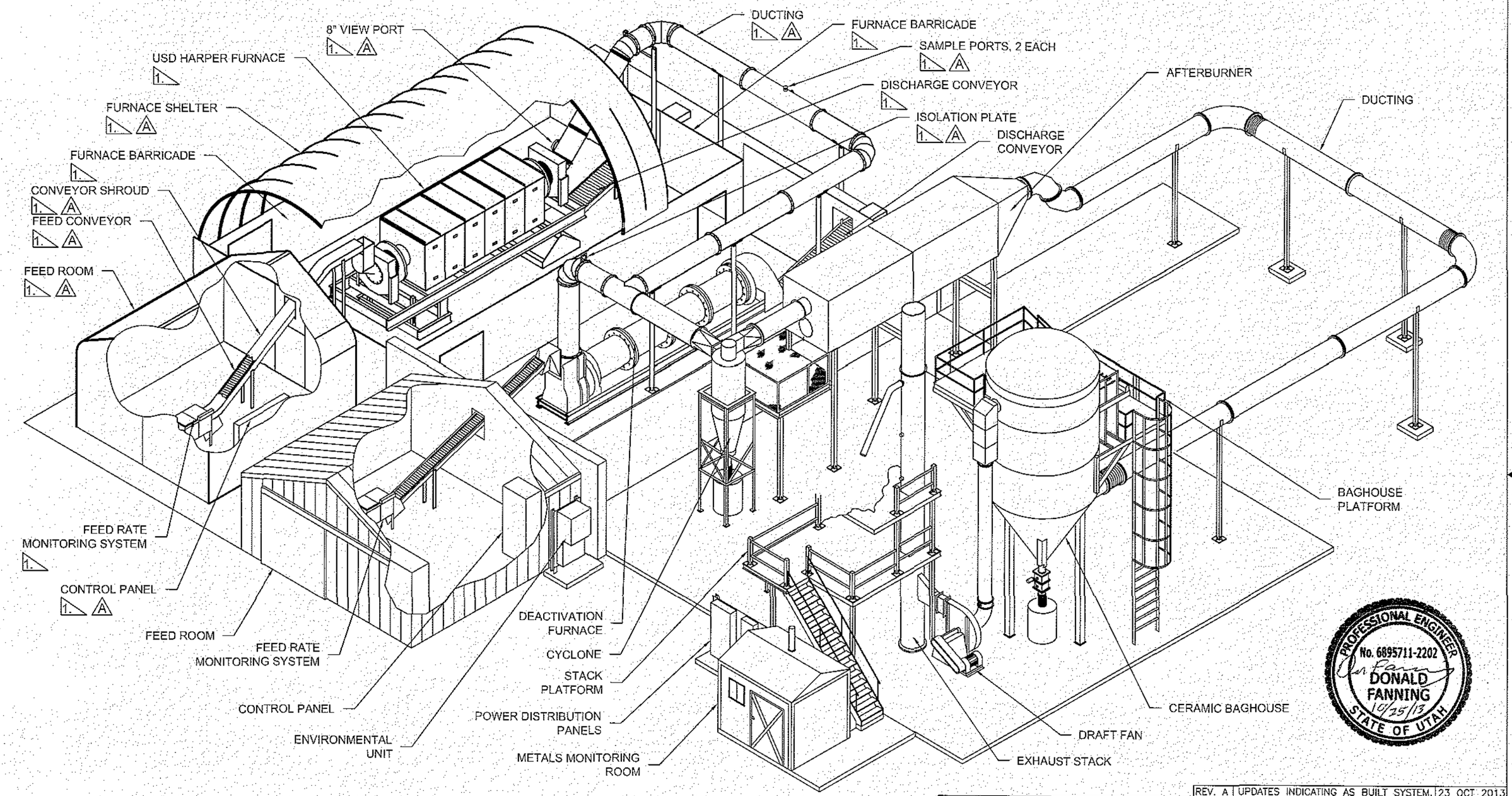

SCALE: 3/32" = 1'

NOTE:

A 1. AS BUILT ITEMS IN SUPPORT OF USD HARPER FURNACE.
2. EQUIPMENT IN THIS LAYOUT ARE NOT DRAWN TO SCALE.
3. THE FUEL AND PROPANE TANKS ARE NOT SHOWN FOR CLARITY OF LAYOUT.

REV. A	UPDATES INDICATING AS BUILT SYSTEM.	23 OCT 2013	
PROJ MGR: KURT FRAUGHTON	UNLESS OTHERWISE NOTED ALL DIMENSIONS ARE IN INCHES DO NOT SCALE DRAWING	US ARMY TOOELE ARMY DEPOT AMMUNITION EQUIPMENT DIRECTORATE	
AED: DON FANNING	TOLERANCES DECIMAL 2 PLACES ± .01 3 PLACES ± .005 FRACTIONAL ± 1/64 ANGULAR ± 0° 30' BREAK SHARP EDGES AND CORNERS	USD RD&D SITE LAYOUT ISOMETRIC GENERAL ASSEMBLY	
SAFETY			
FINAL			
NEXT ASSEMBLY	CHECKED BY: Troy Tate	SIZE: B / CAGE NO: 21624	DWG NO: USD HWI-PERMIT-01 / MOD
	DRAWN BY: Troy Tate	DATE: 1/28/2013	SCALE: AS NOTED / SHT: 1 of 1

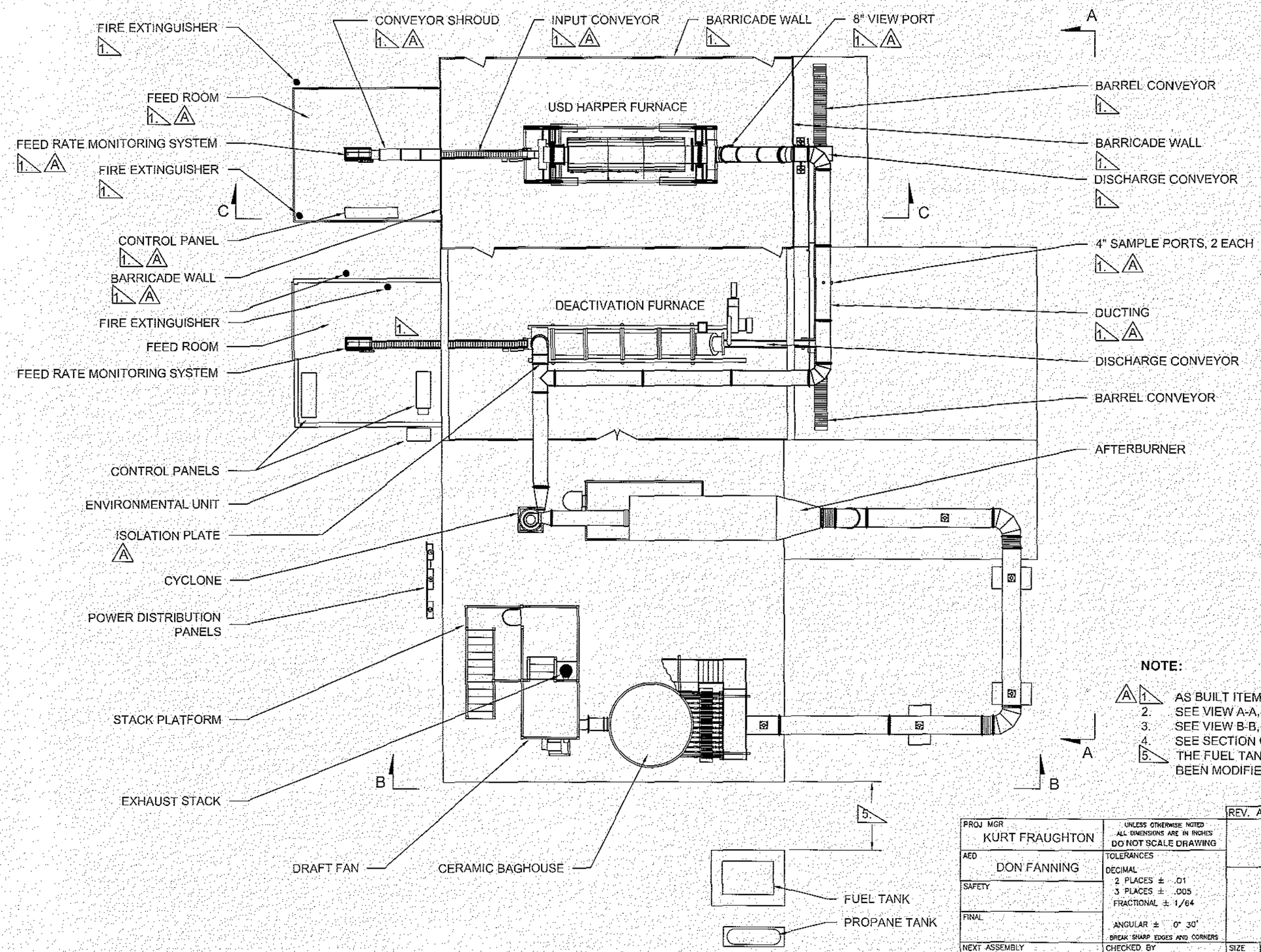

NOTE:

1. AS BUILT ITEMS IN SUPPORT OF USD HARPER FURNACE.
2. SEE VIEW A-A, DWG: USD HWI-PERMIT-03, SHT 1 of 1.
3. SEE VIEW B-B, DWG: USD HWI-PERMIT-04, SHT 1 of 1.
4. SEE SECTION C-C, DWG: USD HWI-PERMIT-05, SHT 1 of 1.
5. THE FUEL TANK AND PROPANE TANK LOCATIONS HAVE BEEN MODIFIED ON THIS LAYOUT.

		REV. A	UPDATES INDICATING AS BUILT SYSTEM.	23 OCT 2013	
PROJ MGR: KURT FRAUGHTON	UNLESS OTHERWISE NOTED ALL DIMENSIONS ARE IN INCHES DO NOT SCALE DRAWING	US ARMY TOOELE ARMY DEPOT AMMUNITION EQUIPMENT DIRECTORATE			
AED: DON FANNING	TOLERANCES DECIMAL 2 PLACES ± .01 3 PLACES ± .005 FRACTIONAL ± 1/64	USD RD&D			
SAFETY		SITE LAYOUT			
FINAL	ANGULAR ± 0° 30' BREAK SHARP EDGES AND CORNERS	GENERAL ASSEMBLY			
NEXT ASSEMBLY	CHECKED BY: Troy Tate	SIZE: B	CAGE NO: 21624	DWG NO: USD HWI-PERMIT-02	MOD
	DRAWN BY: Troy Tate	DATE: 1/28/2013	SCALE: AS NOTED	SHT: 1 of 1	

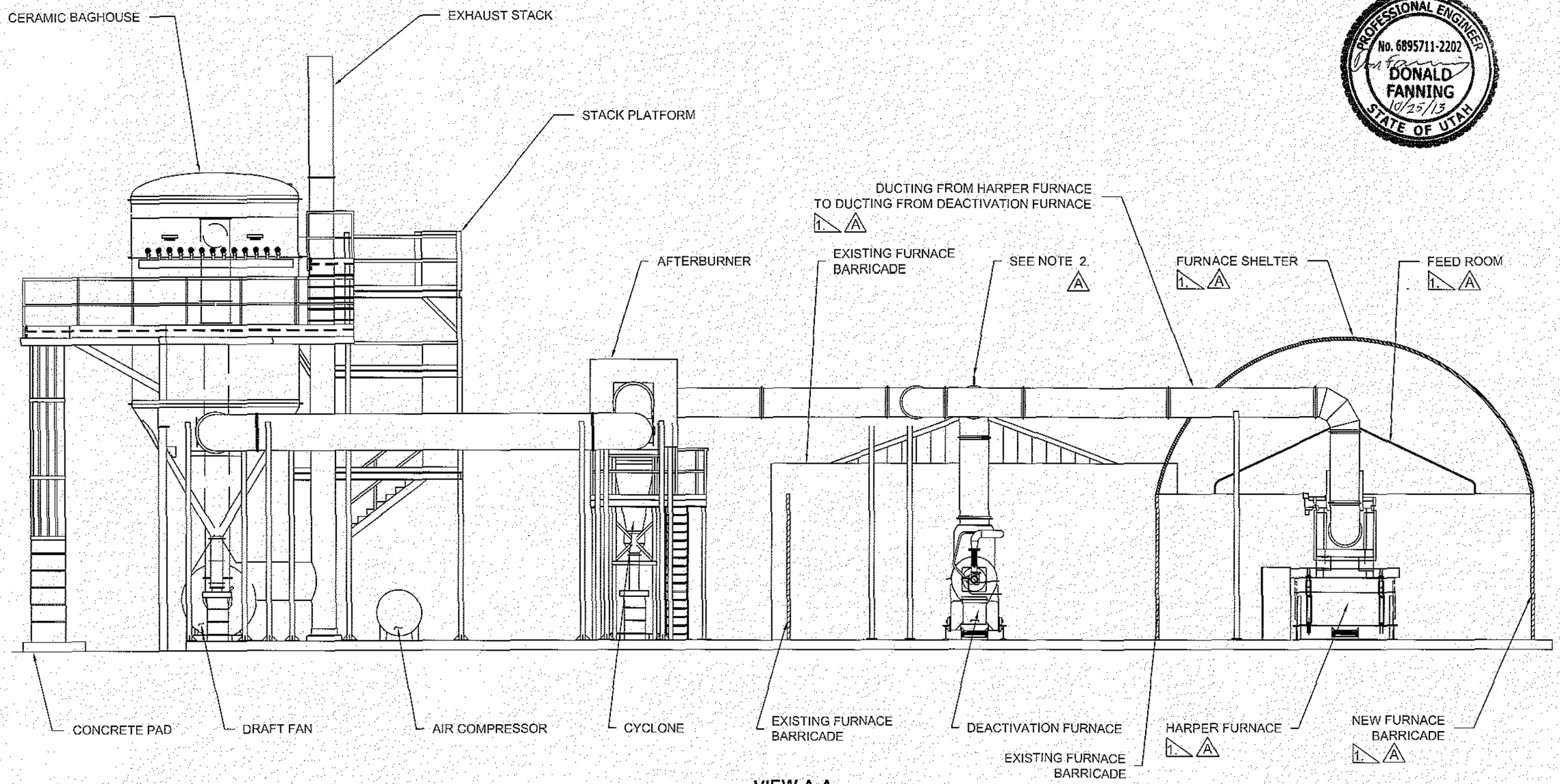

VIEW A-A
SCALE: .013

PROFESSIONAL ENGINEER
No. 6895711-2202
DONALD FANNING
10/25/13
STATE OF UTAH

NOTE:

A 1. AS BUILT ITEMS IN SUPPORT OF USD HARPER FURNACE.

2. DUCT FROM DEACTIVATION FURNACE TO BE RESTRICTED TO OBTAIN PROPER DRAFT FROM HARPER FURNACE.

		REV. A	UPDATES INDICATING AS BUILT SYSTEM.	23 OCT 2013		
PROJ MGR: KURT FRAUGHTON	UNLESS OTHERWISE NOTED ALL DIMENSIONS ARE IN INCHES DO NOT SCALE DRAWING	US ARMY **TOOELE ARMY DEPOT** AMMUNITION EQUIPMENT DIRECTORATE				
AED: DON FANNING	TOLERANCES DECIMAL 2 PLACES ± .01 3 PLACES ± .005 FRACTIONAL ± 1/64 ANGULAR ± 0° 30' BREAK SHARP EDGES AND CORNERS	USD RD&D **SITE LAYOUT VIEW A-A** ELEVATION				
SAFETY						
FINAL						
NEXT ASSEMBLY	CHECKED BY: Troy Tate	SIZE: B	CAGE NO: 21624	DWG NO: USD HWI-PERMIT-03		MOD
	DRAWN BY: Troy Tate	DATE: 1/28/2013		SCALE: AS NOTED		SHT: 1 of 1

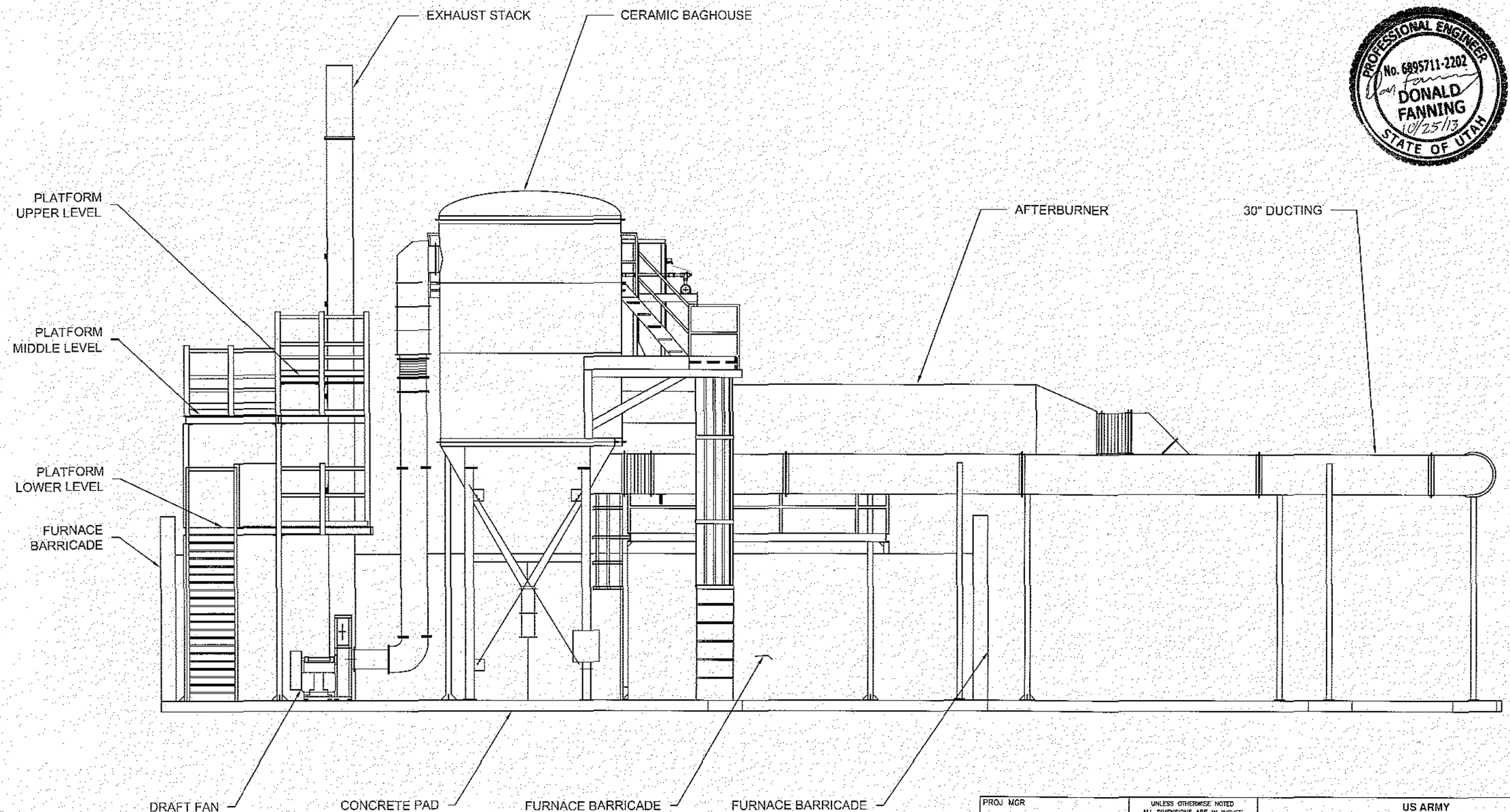

PROFESSIONAL ENGINEER
No. 6895711-2202
DONALD FANNING
10/25/13
STATE OF UTAH

VIEW B-B
SCALE: .013

PROJ MGR: KURT FRAUGHTON	UNLESS OTHERWISE NOTED ALL DIMENSIONS ARE IN INCHES DO NOT SCALE DRAWING	US ARMY **TOOELE ARMY DEPOT** AMMUNITION EQUIPMENT DIRECTORATE			
AED: DON FANNING	TOLERANCES DECIMAL 2 PLACES ± .01 3 PLACES ± .005 FRACTIONAL ± 1/64 ANGULAR ± 0° 30' BREAK SHARP EDGES AND CORNERS	USD RD&D **SITE LAYOUT VIEW B-B** ELEVATION			
SAFETY					
FINAL					
NEXT ASSEMBLY	CHECKED BY: Troy Tate	SIZE: B	CAGE NO: 21624	DWG NO: USD HWI-PERMIT-04	MOD
	DRAWN BY: Troy Tate	DATE: 1/28/2013	SCALE: AS NOTED	SHT: 1 of 1	

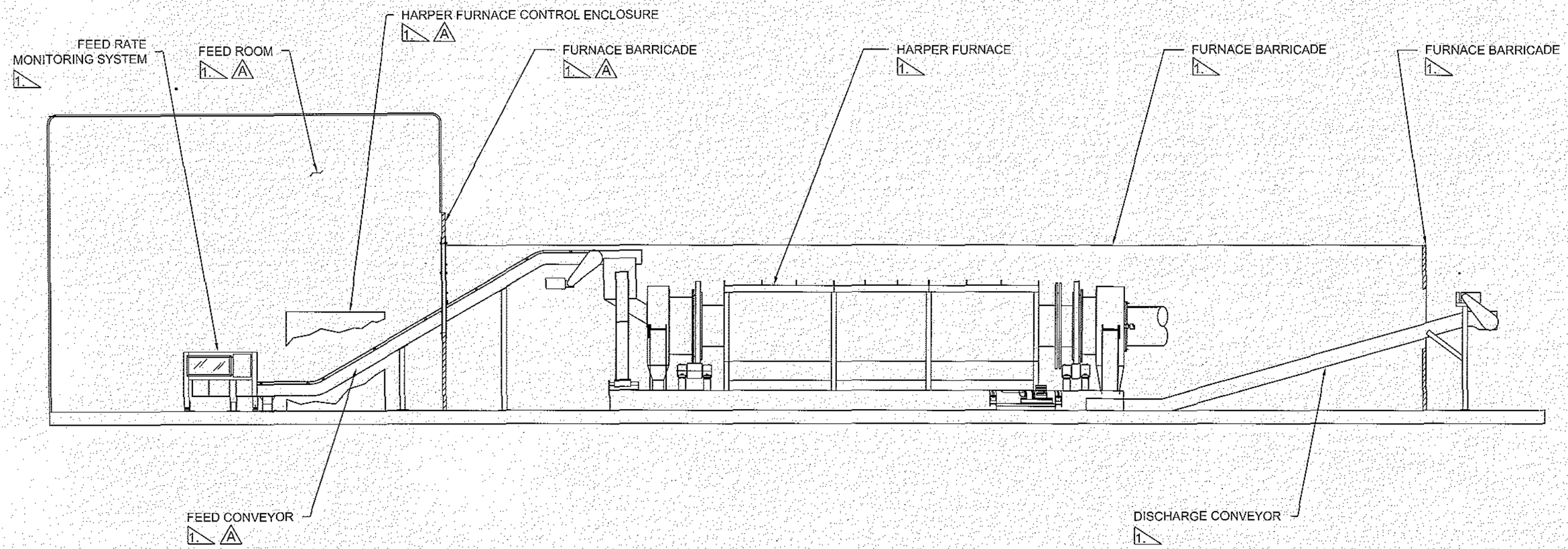

SECTION C-C
SCALE: .016

NOTE:

A 1. ALL ITEMS ARE AS BUILT AND IN SUPPORT OF USD HARPER FURNACE.

PROFESSIONAL ENGINEER
No. 6895711-2202
DONALD FANNING
10/25/13
STATE OF UTAH

		REV. A	UPDATES INDICATING AS BUILT SYSTEM.	23 OCT 2013	
PROJ MGR: KURT FRAUGHTON	UNLESS OTHERWISE NOTED ALL DIMENSIONS ARE IN INCHES DO NOT SCALE DRAWING	US ARMY TOOELE ARMY DEPOT AMMUNITION EQUIPMENT DIRECTORATE			
AED: DON FANNING	TOLERANCES DECIMAL 2 PLACES ± .01 3 PLACES ± .005 FRACTIONAL ± 1/64 ANGULAR ± 0° 30' BREAK SHARP EDGES AND CORNERS	USD RD&D SITE LAYOUT SECTION C-C ELEVATION			
SAFETY					
FINAL					
NEXT ASSEMBLY	CHECKED BY: Troy Tate	SIZE: B	CAGE NO: 21624	DWG NO: USD HWI-PERMIT-05	MOD
	DRAWN BY: Troy Tate	DATE: 1/28/2013	SCALE: AS NOTED	SHT: 1 of 1	

PARTS LIST			
QTY	NOMENCLATURE	VENDOR	PART NO
A/R	INSULATION, HOT FACE, TYPE PYRO-BLOCK, 8" THICK, LIGHT WEIGHT CERAMIC KAOWOOL, PYRO-BLOCK Y, MODULE R, 12 X 12 X 8, 15#	THERMAL CERAMICS 350-1891-008-0200	001
A/R	INSULATION, HOT FACE, TYPE PYRO-BLOCK, 8" THICK, LIGHT WEIGHT CERAMIC KAOWOOL, PYRO-BLOCK Y, MODULE R, 12 X 12 X 8, 15#	THERMAL CERAMICS 350-0891-008-0200	002
A/R A/R	INSULATION, HOT FACE, TYPE PYRO-BLOCK, 8" THICK, LIGHT WEIGHT CERAMIC, KAOWOOL PYRO-BLOCK "R", LONG FIBER SPLIT, 6 X 12 X 8, 15#	THERMAL CERAMICS 350-0891-308-0220	003
A/R	INSULATION, HOT FACE, TYPE PYRO-BLOCK, 8" THICK, LIGHT WEIGHT CERAMIC, KAOWOOL PYRO-BLOCK "R", SHORT FIBER SPLIT, 6 X 12 X 8, 10#	THERMAL CERAMICS 350-0891-108-0220	004

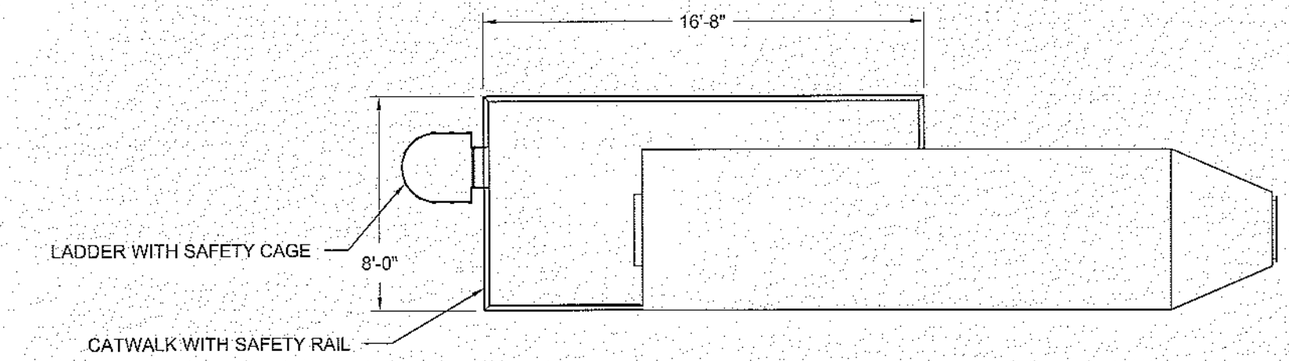

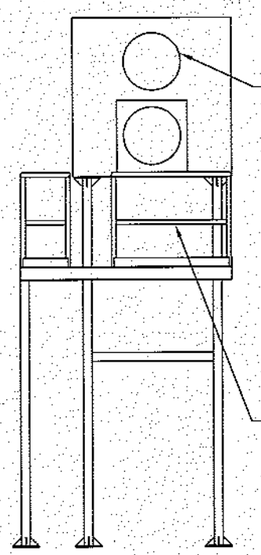

FURNACE SIDE

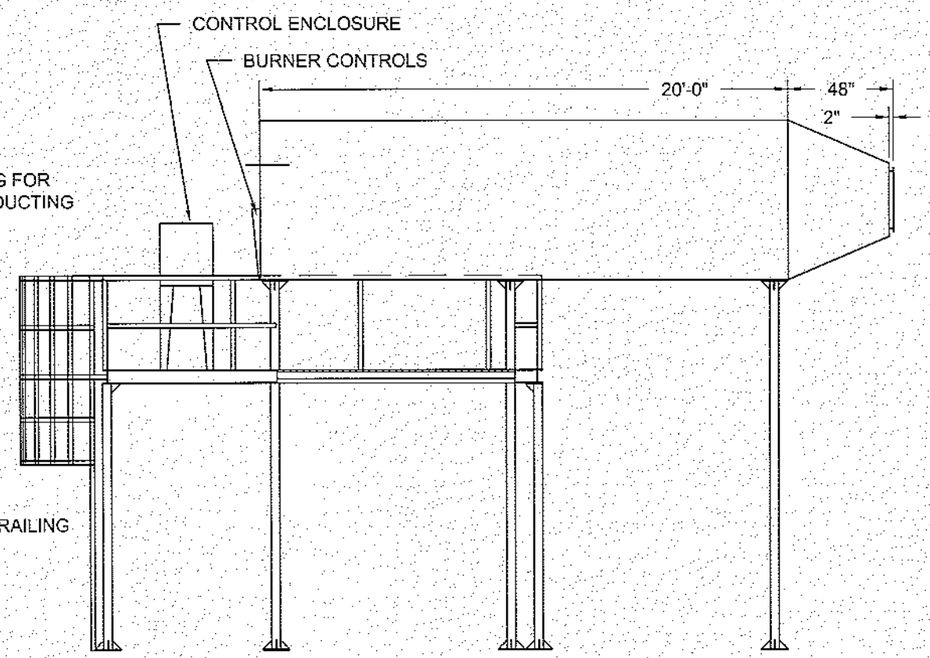

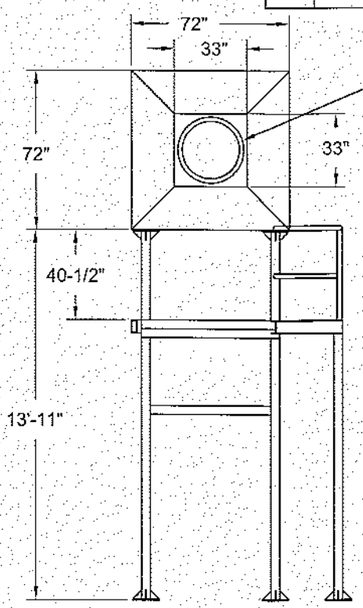

HIGH TEMP HEAT EXCHANGER SIDE

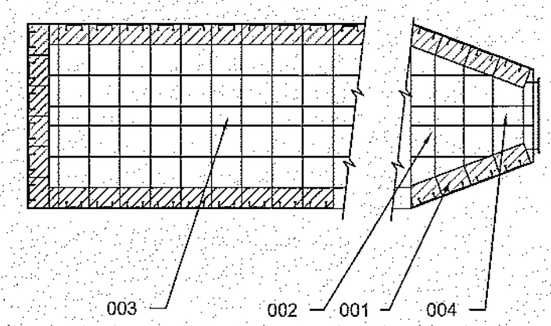

AFTERBURNER INTERIOR INSULATION

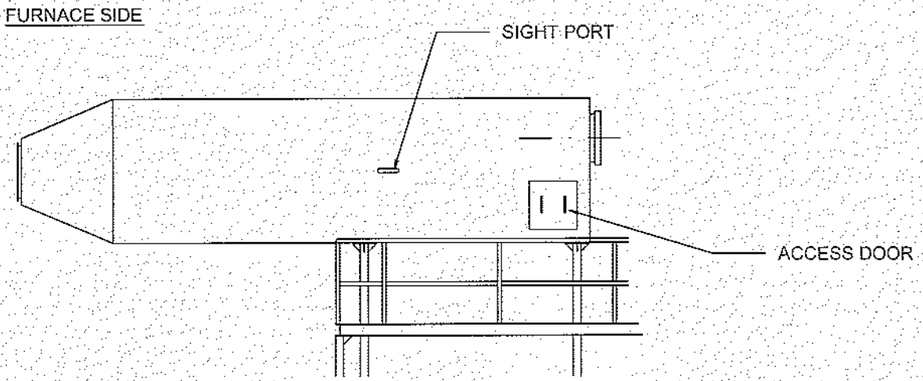

CATWALK SIDE

CATWALK SIDE

PROFESSIONAL ENGINEER
No. 6895711-2202
DONALD FANNING
10/25/13
STATE OF UTAH

PROJ MGR: KURT FRAUGHTON	UNLESS OTHERWISE NOTED ALL DIMENSIONS ARE IN INCHES DO NOT SCALE DRAWING	US ARMY TOOELE ARMY DEPOT AMMUNITION EQUIPMENT DIRECTORATE			
AED: DON FANNING	TOLERANCES DECIMAL 2 PLACES ± .01 3 PLACES ± .005 FRACTIONAL ± 1/64	USD RD&D			
SAFETY		AFTERBURNER			
FINAL	ANGULAR ± 0° 30' BREAK SHARP EDGES AND CORNERS	ASSEMBLY			
NEXT ASSEMBLY: 1236M1-01	CHECKED BY: Troy Tate	SIZE: B	CAGE NO: 21624	DWG NO: USD HWI-PERMIT-06	MOD
	DRAWN BY: Troy Tate	DATE: 1/28/2013	SCALE: AS NOTED	SHT: 1 of 1	

PARTS LIST			
QTY	NOMENCLATURE	VENDOR	PART NO
1	CYCLONE DUSTCOLLECTOR, CENTRIFUGAL WITH INSPECTION DOOR, SIZE 165, TYPE VM	DUCOM MODEL: 700/150	001

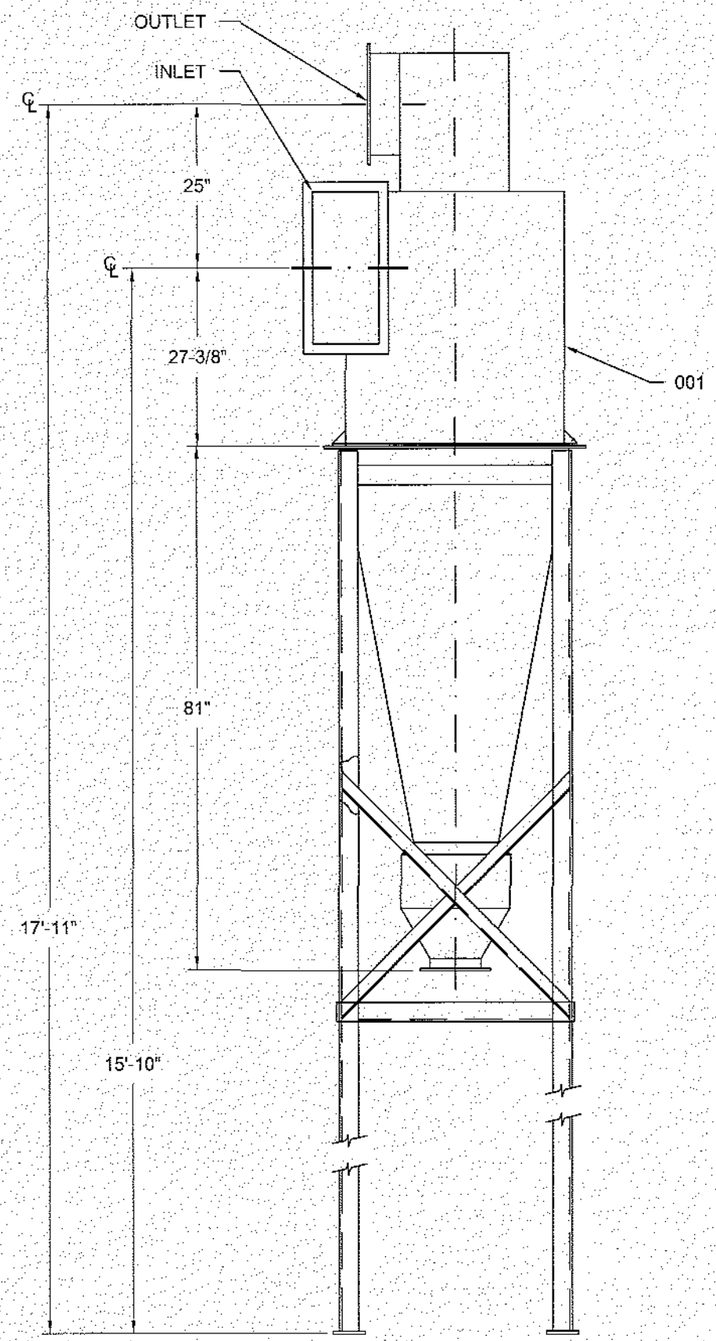

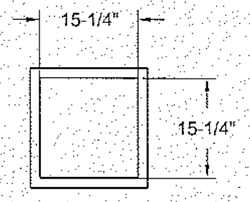

OUTLET

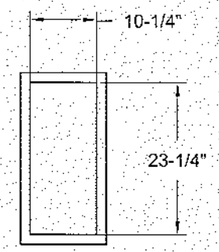

INLET

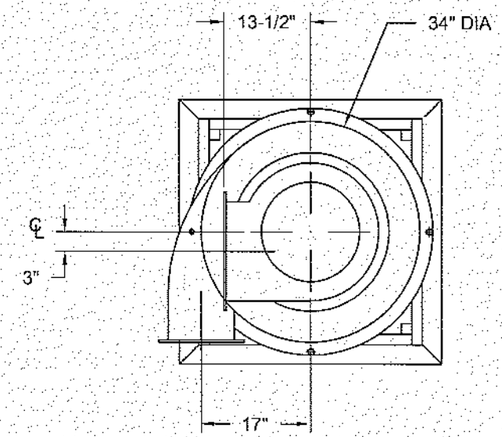

SCALE: .043

PROFESSIONAL ENGINEER
No. 6895711-2202
DONALD FANNING
10/25/13
STATE OF UTAH

PROJ MGR: KURT FRAUGHTON	UNLESS OTHERWISE NOTED ALL DIMENSIONS ARE IN INCHES DO NOT SCALE DRAWING	US ARMY TOOELE ARMY DEPOT AMMUNITION EQUIPMENT DIRECTORATE
AED: DON FANNING	TOLERANCES DECIMAL 2 PLACES ± .01 3 PLACES ± .005 FRACTIONAL ± 1/64 ANGULAR ± 0° 30' BREAK SHARP EDGES AND CORNERS	USD RD&D
SAFETY		CYCLONE
FINAL		ASSEMBLY
NEXT ASSEMBLY	CHECKED BY: Troy Tate	SIZE: B; CAGE NO: 21624; DWG NO: USD HWI-PERMIT-07; MOD
	DRAWN BY: Troy Tate	DATE: 1/28/2013; SCALE: AS NOTED; SHT: 1 of 1

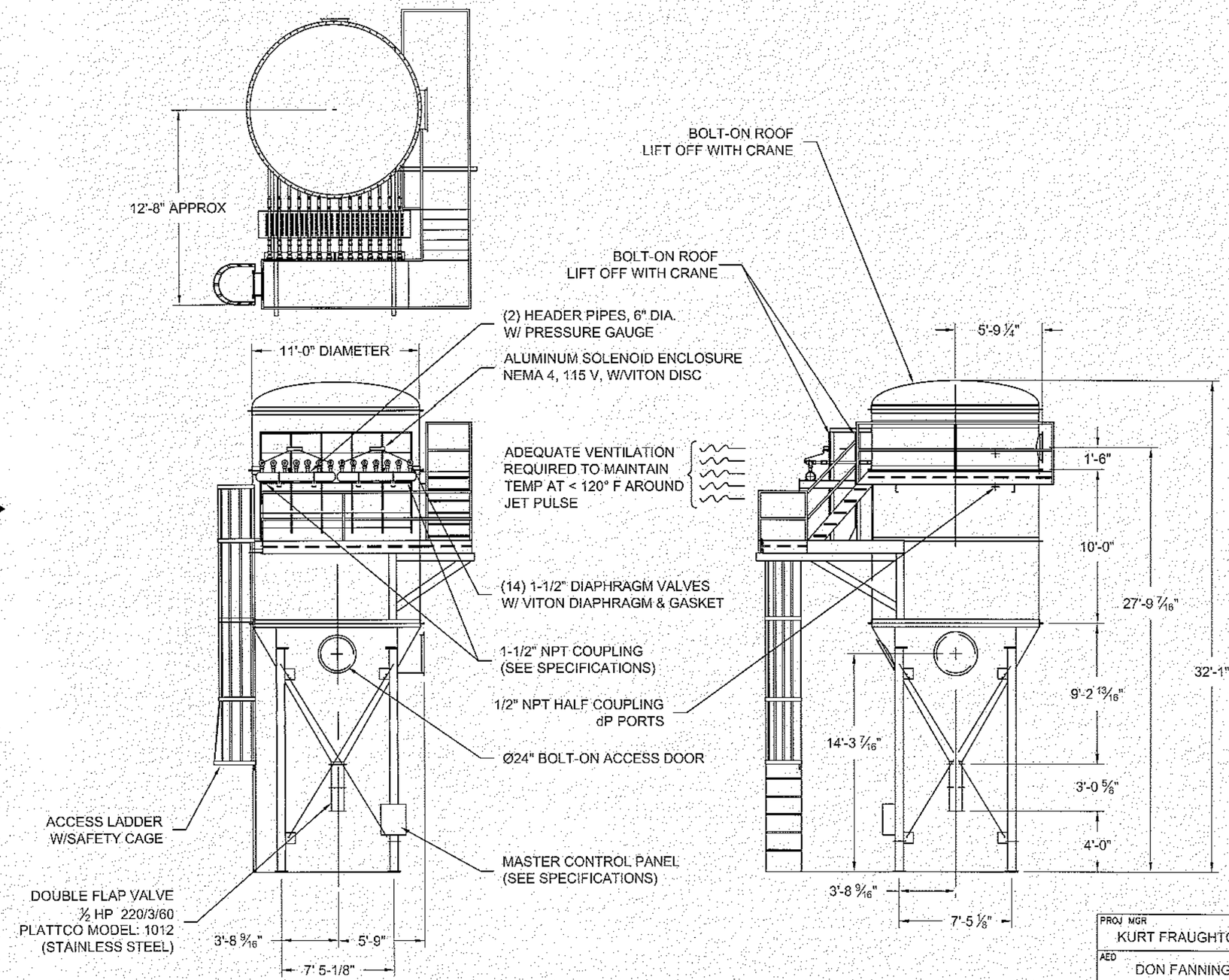

SCALE: .011

BAGHOUSE SPECIFICATIONS
MODEL: CF-154-HC

CONSTRUCTION
DESIGN PRESSURE: -30" W.G.
DESIGN TEMPERATURE: 1000° F MAX
DESIGN WIND SPEED: 130 MPH
WALKWAYS AND SUPPORT STEEL: CARBON STEEL
EXTERIOR: CARBON STEEL
WALLS: 7 GA. 304 SS
TUBE SHEET: 5/16" PL. 304 SS
BLOW TUBES: STAINLESS STEEL
HEADER PIPE: STAINLESS STEEL
DIAPHRAGM VALVES: ALUMINUM
DIAPHRAGM PILOT: COPPER TUBING
SOLENOID VALVES: ALUMINUM

CERAMIC FILTER ELEMENT
QTY: 154, FILTER AREA 2310 SQ. FT.
MATERIAL: "CERAFIL" CERAMIC FILTER ELEMENT
SIZE: 5-3/4" DIA. x 120" LG.
VENTURIS: STAINLESS STEEL

MASTER CONTROL PANEL
NEMA 4 ENCLOSURE (MOUNTED TO SUPPORT LEG)
ADJUSTABLE PULSE TIMERS, 115 VAC
DISCONNECT SWITCH
208V MOTOR STARTER, FOR DOUBLE FLAP VALVE
START/STOP SWITCHES W/LIGHTS FOR DOUBLE FLAP VALVE AND PULSE CONTROL
PULSE CONTROL AND DOUBLE FLAP VALVE FACTORY WIRED

APPLICATION
PROCESS INCINERATION
MATERIAL: AMMUNITION
LOCATION: OUTDOORS
AIR VOLUME: 11,600 ACFM @ 1000° F
AIR/CLOTH RATIO: 5.0/1

PROFESSIONAL ENGINEER
No. 6895711-2202
DONALD FANNING
10/25/13
STATE OF UTAH

PROJ MGR: KURT FRAUGHTON	UNLESS OTHERWISE NOTED ALL DIMENSIONS ARE IN INCHES DO NOT SCALE DRAWING	US ARMY TOOELE ARMY DEPOT AMMUNITION EQUIPMENT DIRECTORATE			
AED: DON FANNING	TOLERANCES DECIMAL 2 PLACES ± .01 3 PLACES ± .005 FRACTIONAL ± 1/64	USD RD&D			
SAFETY		CERAMIC BAGHOUSE			
FINAL	ANGULAR ± 0° 30' BREAK SHARP EDGES AND CORNERS	ASSEMBLY			
NEXT ASSEMBLY: 1236M1-01	CHECKED BY: Troy Tate	SIZE: B	CAGE NO: 21624	DWG NO: USD HWI-PERMIT-08	MOD
	DRAWN BY: Troy Tate	DATE: 1/28/2013	SCALE: AS NOTED	SHT: 1 of 1	

PARTS LIST		
QTY	NOMENCLATURE	PART NO
1	FAN, SIZE M-21, TYPE IE, CFM: 6700 @ 30 INCHES WATER GAGE STATIC PRESSURE RUNNING AT 2579 RPM AT 5000' ELEVATION, MAXIMUM RPM 2472. REF: FAN EQUIPMENT COMPANY 3925 W SUNSET RD LAS VEGAS, NV 89118	001

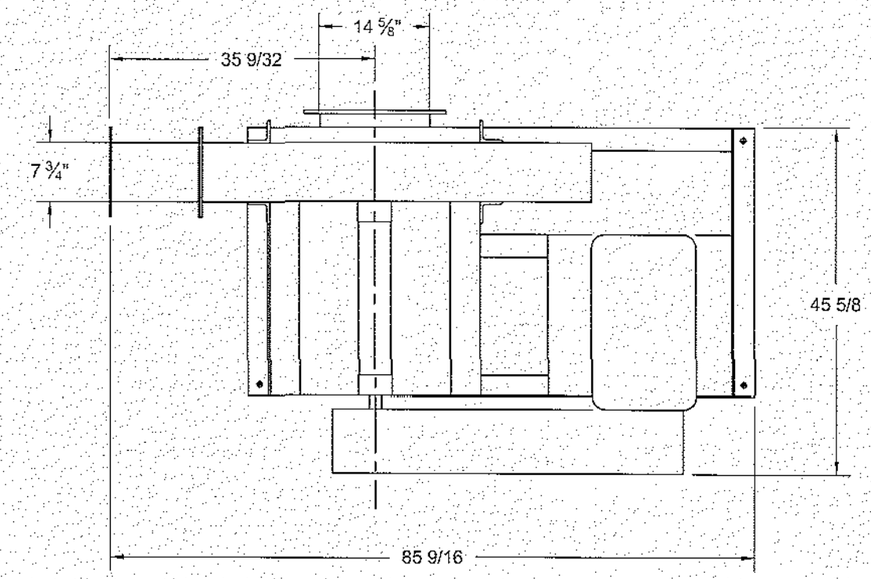

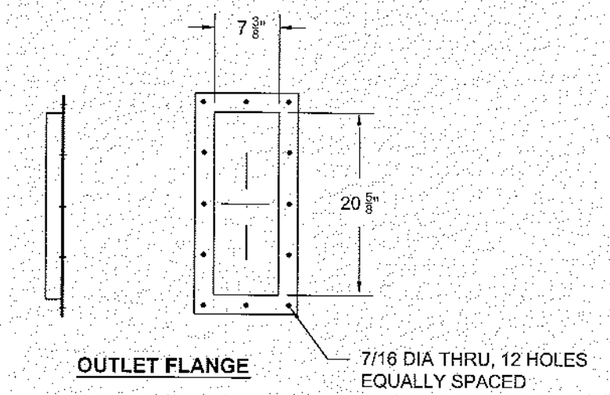

OUTLET FLANGE

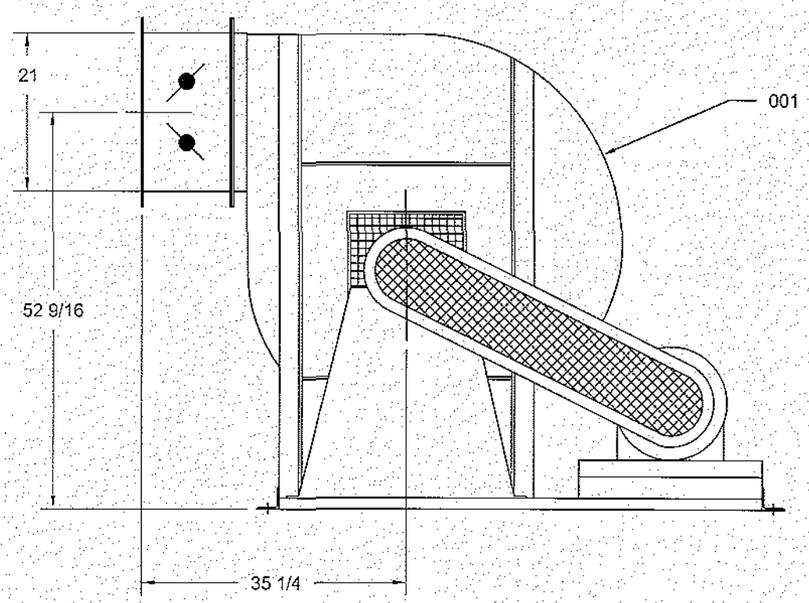

SCALE: .05

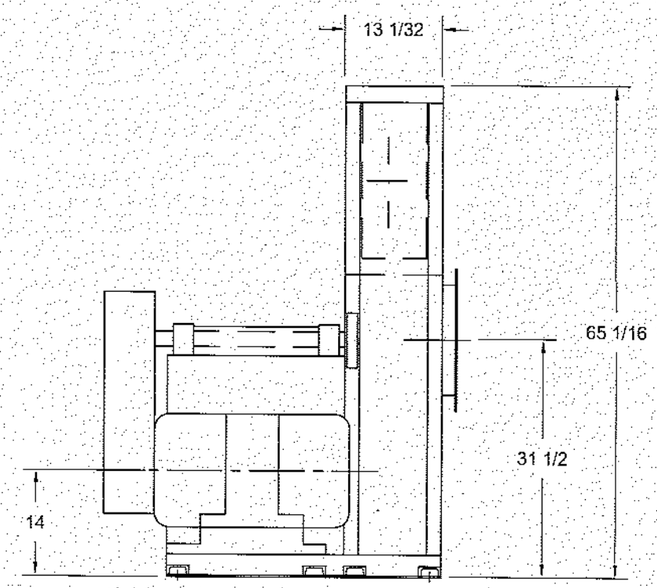

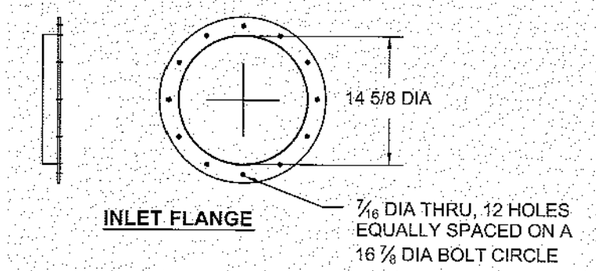

INLET FLANGE

SCALE: .06

PROFESSIONAL ENGINEER
No. 6895711-2202
DONALD FANNING
10/25/13
STATE OF UTAH

PROJ MGR: KURT FRAUGHTON	UNLESS OTHERWISE NOTED ALL DIMENSIONS ARE IN INCHES DO NOT SCALE DRAWING	US ARMY TOOELE ARMY DEPOT AMMUNITION EQUIPMENT DIRECTORATE			
AED: DON FANNING	TOLERANCES DECIMAL 2 PLACES ± .01 3 PLACES ± .005 FRACTIONAL ± 1/64 ANGULAR ± 0° 30' BREAK SHARP EDGES AND CORNERS	USD RD&D DRAFT FAN SUB-ASSEMBLY			
SAFETY					
FINAL					
NEXT ASSEMBLY	CHECKED BY: Troy Tate	SIZE: B	CAGE NO: 21624	DWG NO: USD HWI-PERMIT-09	MOD
	DRAWN BY: Troy Tate	DATE: 1/28/2013	SCALE: AS NOTED	SHT: 1 of 1	

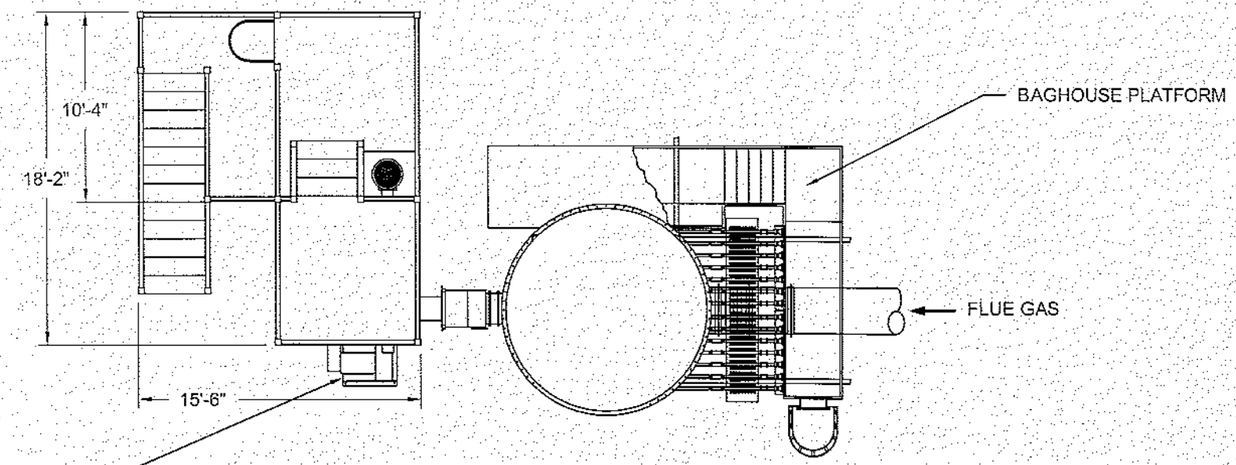

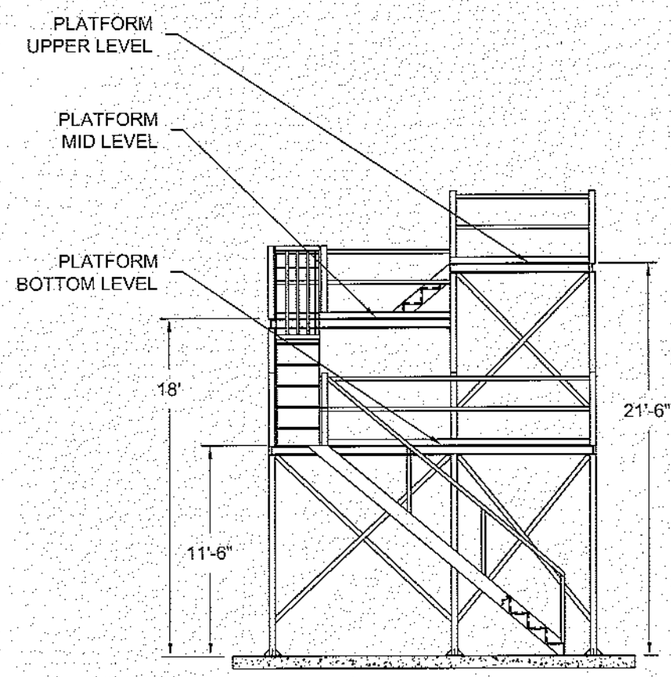

STACK PLATFORM ONLY

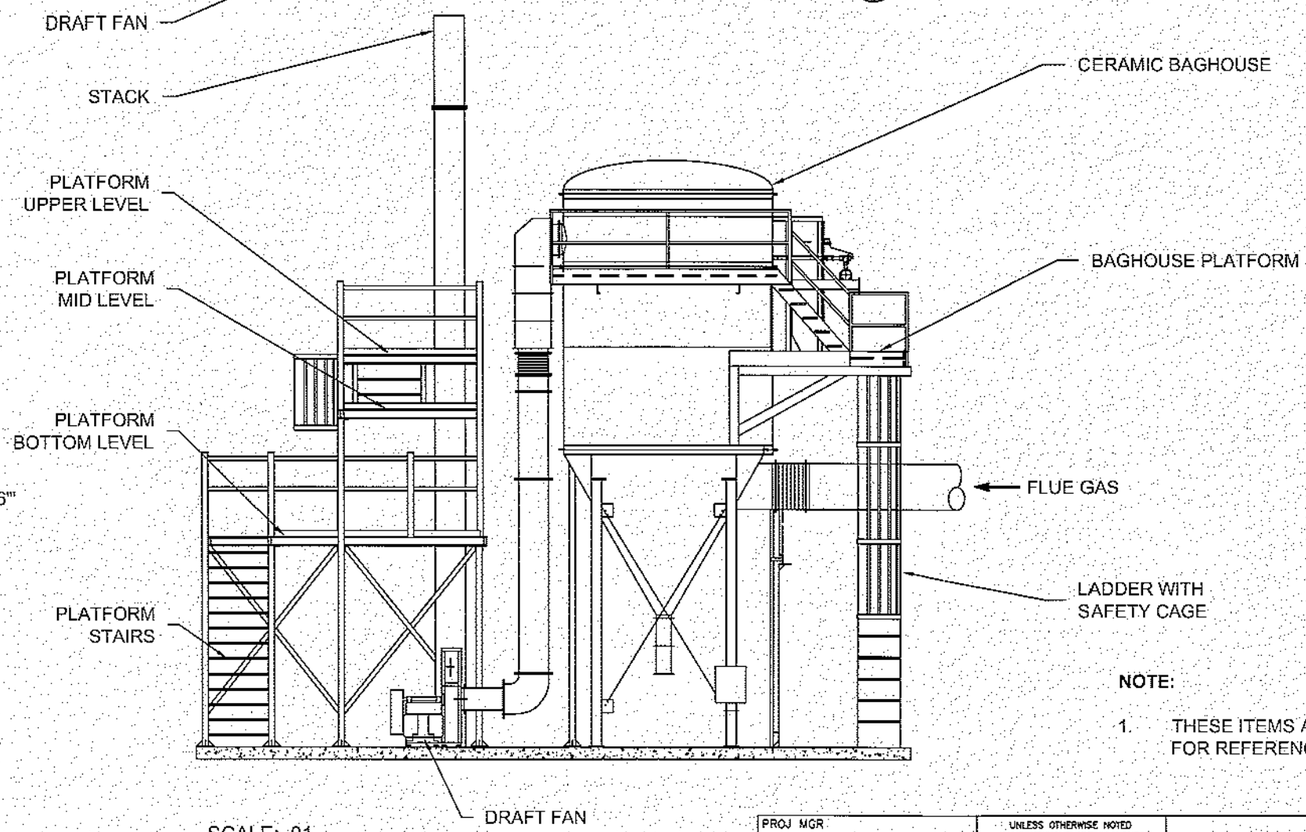

SCALE: .01

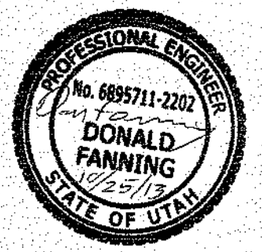

NOTE:

1. THESE ITEMS ARE NOT DRAWN TO SCALE. FOR REFERENCE ONLY.

PROJ MGR: KURT FRAUGHTON	UNLESS OTHERWISE NOTED ALL DIMENSIONS ARE IN INCHES DO NOT SCALE DRAWING	US ARMY TOOELE ARMY DEPOT AMMUNITION EQUIPMENT DIRECTORATE			
AED: DON FANNING	TOLERANCES DECIMAL 2 PLACES ± .01 3 PLACES ± .005 FRACTIONAL ± 1/64 ANGULAR ± 0° 30' BREAK SHARP EDGES AND CORNERS	USD RD&D STACK PLATFORM & CERAMIC BAGHOUSE SUB-ASSEMBLY			
SAFETY					
FINAL					
NEXT ASSEMBLY	CHECKED BY: Troy Tate	SIZE: B	CAGE NO: 21624	DWG NO: USD HWI-PERMIT-10	MOD
	DRAWN BY: Troy Tate	DATE: 1/28/2013		SCALE: AS NOTED	SHT: 1 of 1

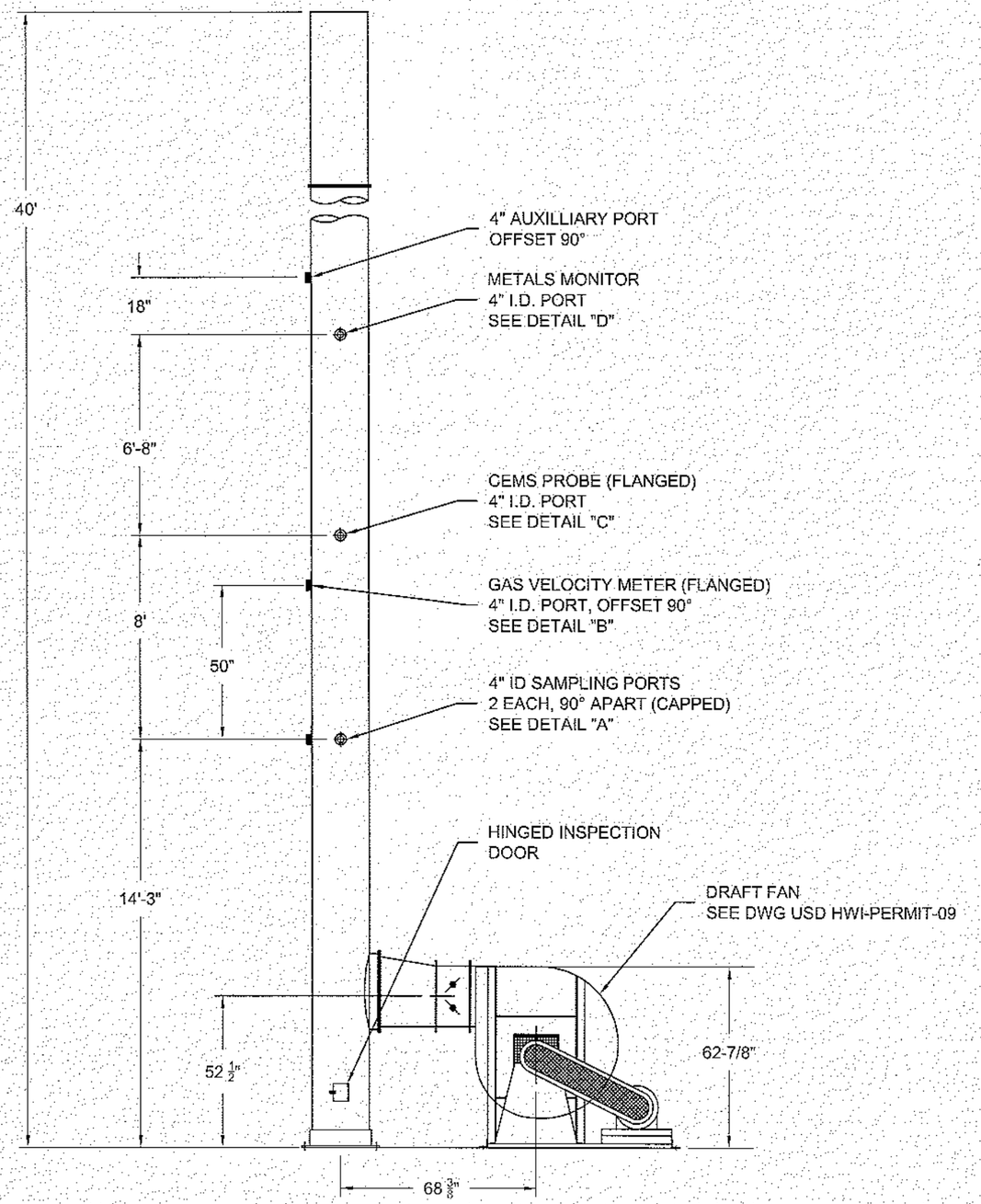

SCALE: .021

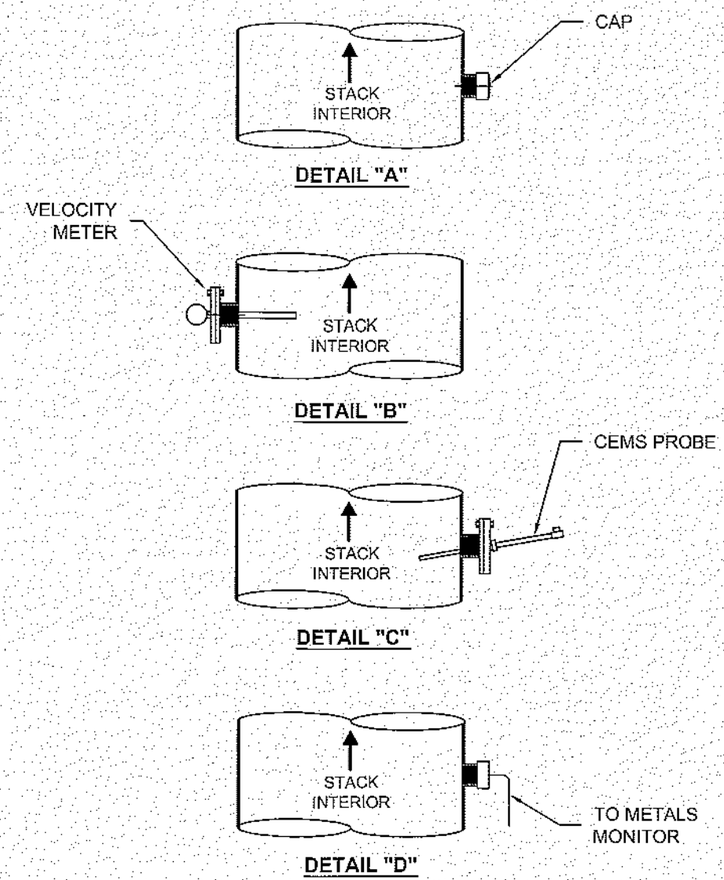

SCALE: .015

PROFESSIONAL ENGINEER
No. 6895711-2202
DONALD FANNING
10/25/13
STATE OF UTAH

PROJ MGR: KURT FRAUGHTON	UNLESS OTHERWISE NOTED ALL DIMENSIONS ARE IN INCHES DO NOT SCALE DRAWING	US ARMY TOOELE ARMY DEPOT AMMUNITION EQUIPMENT DIRECTORATE			
AED: DON FANNING	TOLERANCES DECIMAL 2 PLACES ± .01 3 PLACES ± .005 FRACTIONAL ± 1/64 ANGULAR ± 0° 30' BREAK SHARP EDGES AND CORNERS	USD RD&D EXHAUST STACK PORT IDENTIFICATION DETAIL			
SAFETY					
FINAL					
NEXT ASSEMBLY	CHECKED BY: Troy Tate	SIZE: B	CAGE NO: 21624	DWG NO: USD HWI-PERMIT-11	MOD
	DRAWN BY: Troy Tate	DATE: 1/28/2013		SCALE: AS NOTED	SHT: 1 of 1

PARTS LIST			
QTY	NOMENCLATURE	VENDOR	PART NO.
1	FLANGE, BLIND, CARBON STEEL, 3" 150 LB., MODIFIED AS SHOWN		001
1	SAMPLE PROBE, SST REF: SOUTHERN TECHNOLOGIES		002
1	TEE, PIPE, STEEL, 150 LB. ⅜ NPTF x ⅜ NPTF x ¼ NPTF		003

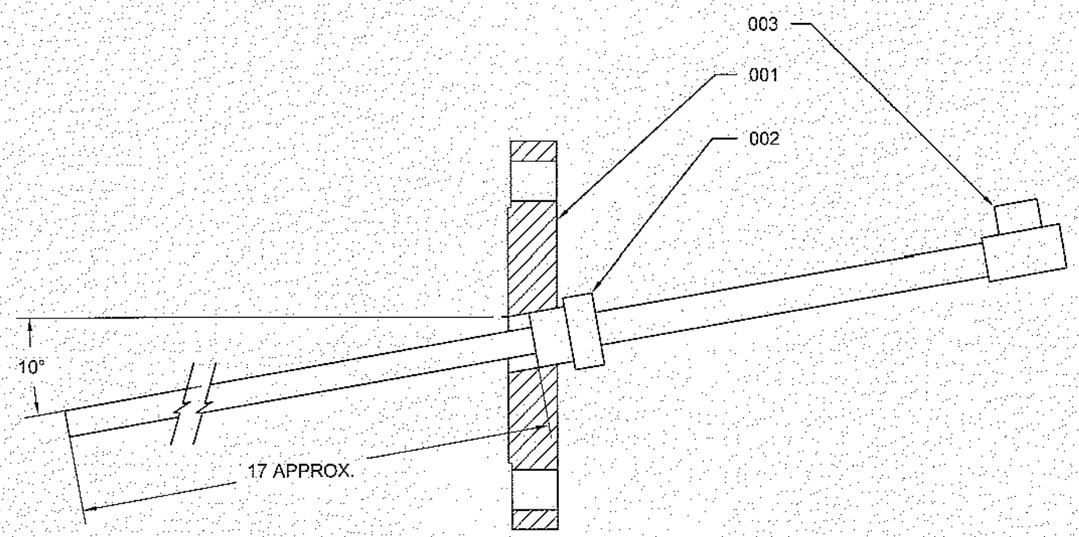

SCALE: .35

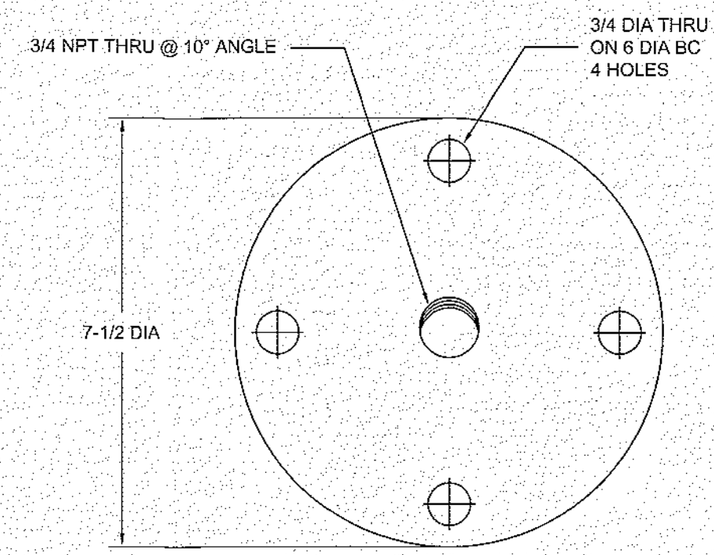

0001
SCALE: .38

PROFESSIONAL ENGINEER
No. 6895711-2202
DONALD FANNING
10/25/13
STATE OF UTAH

NOTES:
1. USE TEFLON TAPE ON PIPE THREADS FOR TEMPERATURES LESS THAN 500° F. FOR SERVICE TEMPERATURE ABOVE 500° F USE JET LUBE NIKAL HEIGHT TEMPERATURE THREAD LUBRICANT OR EQUAL.

PROJ. MGR: KURT FRAUGHTON	UNLESS OTHERWISE NOTED ALL DIMENSIONS ARE IN INCHES DO NOT SCALE DRAWING	US ARMY TOOELE ARMY DEPOT AMMUNITION EQUIPMENT DIRECTORATE			
AED: DON FANNING	TOLERANCES DECIMAL 2 PLACES ± .01 3 PLACES ± .005 FRACTIONAL ± 1/64 ANGULAR ± 0° 30' BREAK SHARP EDGES AND CORNERS	USD RD&D GAS MONITORING SAMPLE PROBE DETAIL			
SAFETY					
FINAL					
NEXT. ASSEMBLY	CHECKED BY: Troy Tate	SIZE: B	CAGE NO: 21624	DWG NO: USD HWI-PERMIT-12	MOD
	DRAWN BY: mg	DATE: 1/28/2013		SCALE: AS NOTED	SHT: 1 of 1

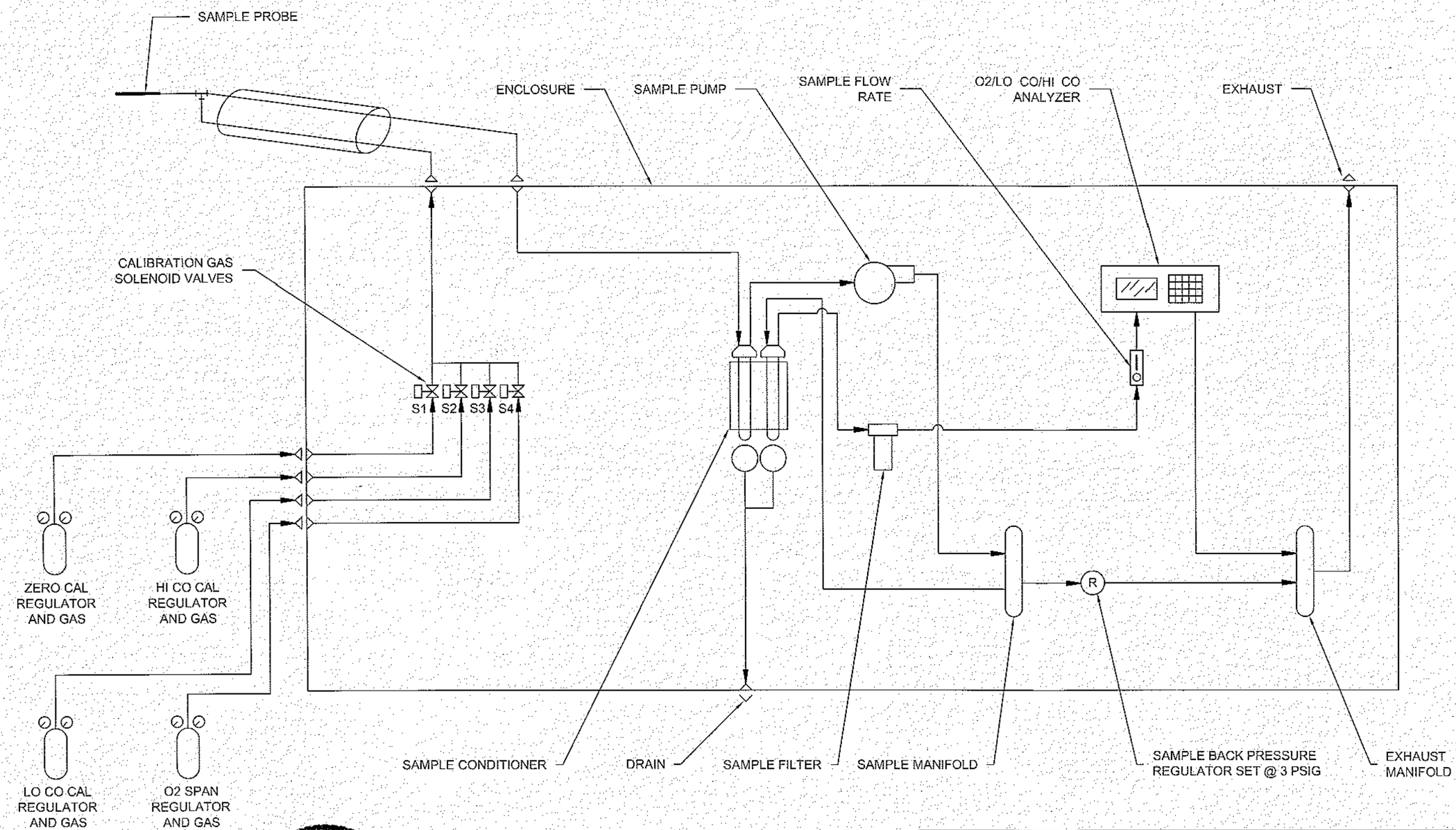

PROFESSIONAL ENGINEER
No. 6895711-2202
DONALD FANNING
10/25/13
STATE OF UTAH

NOTES:

1. ALL TUBING TO BE TFE SIZED AS INDICATED.

◁▷ BULKHEAD FITTING.

PROJ MGR KURT FRAUGHTON	UNLESS OTHERWISE NOTED ALL DIMENSIONS ARE IN INCHES DO NOT SCALE DRAWING	US ARMY TOOELE ARMY DEPOT AMMUNITION EQUIPMENT DIRECTORATE			
AED DON FANNING	TOLERANCES DECIMAL 2 PLACES ± .01 3 PLACES ± .005 FRACTIONAL ± 1/64 ANGULAR ± 0° 30' BREAK SHARP EDGES AND CORNERS	USD RD&D CO & O2 MONITORING SAMPLE SYSTEM DETAIL			
SAFETY					
FINAL					
NEXT ASSEMBLY	CHECKED BY Troy Tate	SIZE B	CAGE NO 21624	DWG NO USD HWI-PERMIT-13	MOD
	DRAWN BY Troy Tate	DATE 1/28/2013		SCALE NO SCALE	SHT 1 of 1

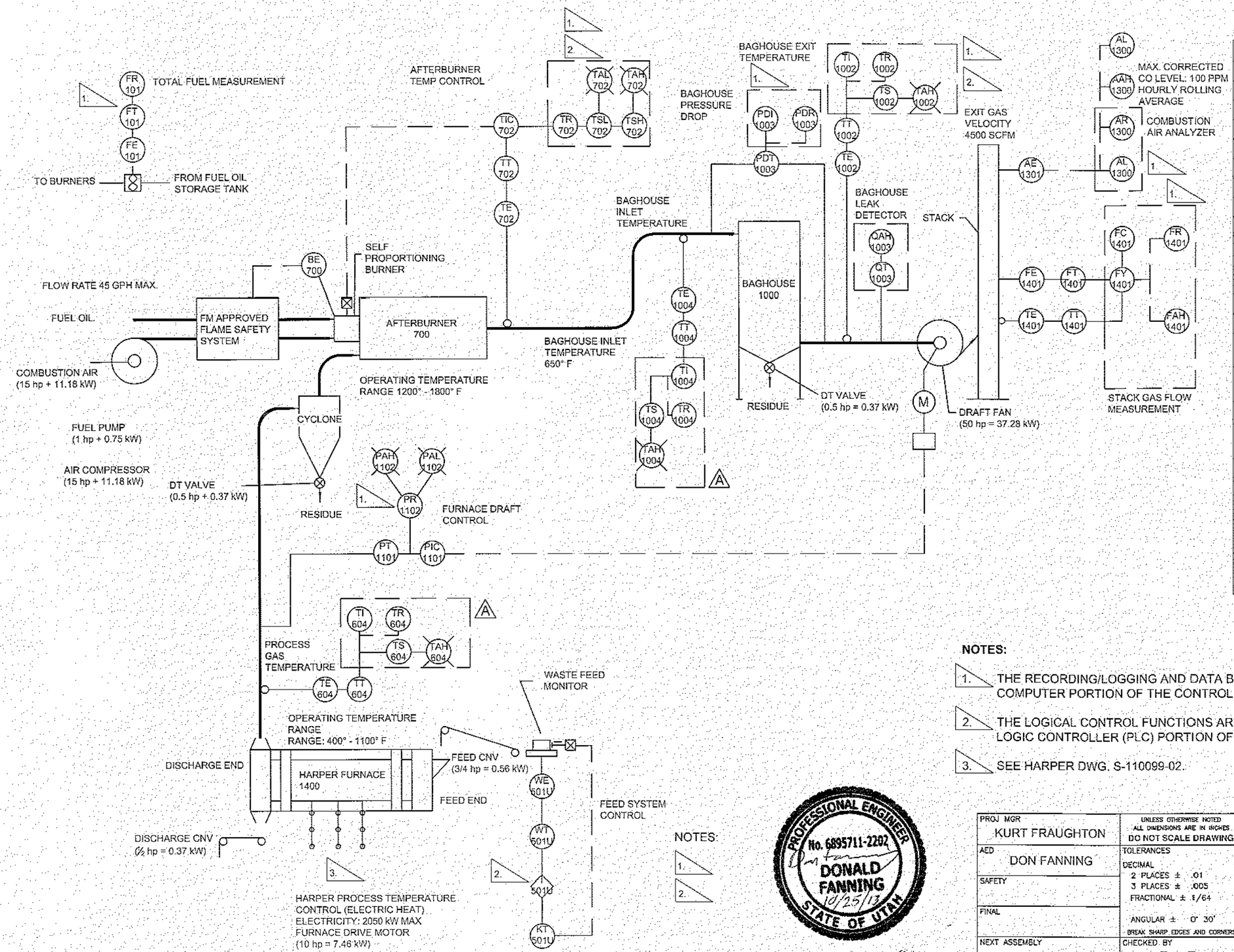

	FIRST LETTER	SECOND LETTER	THIRD LETTER
A	ANALYSIS	ALARM	
B	BURNER FLAME		
C	CONDUCTIVITY	CALCULATE	CONTROL
D	DENSITY	DIFFERENTIAL	
E	VOLTAGE (EMF)	PRIMARY ELEMENT	
F	FLOW RATE	RATIO (FRACTION)	
G	GAGING	GLASS	
H	HAND		HIGH
I	CURRENT	INDICATE	
J	POWER	SCAN	
K	TIME		
L	LEVEL	LIGHT (PILOT)	LOW
M	MOISTURE		
O		ORIFICE	
P	PRESSURE OR VACUUM	POINT	
Q	QUANTITY OR EVENT	INTEGRATE OR TOTALIZE	
R		RECORD OR PRINT	
S	SPEED OR FREQUENCY	SAFETY	SWITCH
T	TEMPERATURE	TRANSMIT	TRANSMIT
U	MULTIVARIABLE	MULTIFUNCTION	MULTIFUNCTION
V	VISCOSITY		VALVE
W	WEIGHT OR FORCE	WELL	
Y	USERS CHOICE	COMPUTER	
Z	POSITION		DRIVE

NOTES:

1. THE RECORDING/LOGGING AND DATA BASE FUNCTIONS ARE PROVIDED BY THE COMPUTER PORTION OF THE CONTROL SYSTEM.
2. THE LOGICAL CONTROL FUNCTIONS ARE PROVIDED BY THE PROGRAMMABLE LOGIC CONTROLLER (PLC) PORTION OF THE CONTROL SYSTEM.
3. SEE HARPER DWG. S-110099-02.

PROFESSIONAL ENGINEER No. 6895711-2202 DONALD FANNING 10/25/13 STATE OF UTAH

REV.		
A	UPDATES INDICATING AS BUILT SYSTEM.	23 OCT 2013

PROJ MGR: KURT FRAUGHTON
AED: DON FANNING
SAFETY
FINAL
NEXT ASSEMBLY

UNLESS OTHERWISE NOTED ALL DIMENSIONS ARE IN INCHES. DO NOT SCALE DRAWING

TOLERANCES
DECIMAL
2 PLACES ± .01
3 PLACES ± .005
FRACTIONAL ± 1/64
ANGULAR ± 0° 30'
BREAK SHARP EDGES AND CORNERS

US ARMY
TOOELE ARMY DEPOT
AMMUNITION EQUIPMENT DIRECTORATE

USD RD&D

FLOW CONTROL P&ID

DIAGRAM

CHECKED BY	SIZE	CAGE NO	DWG NO	MOD
Troy Tate	B	21624	USD HWI-PERMIT-14	
DRAWN BY	**DATE**	**SCALE**	**SHT**	
Troy Tate	1/28/2013	AS NOTED	1 of 1	

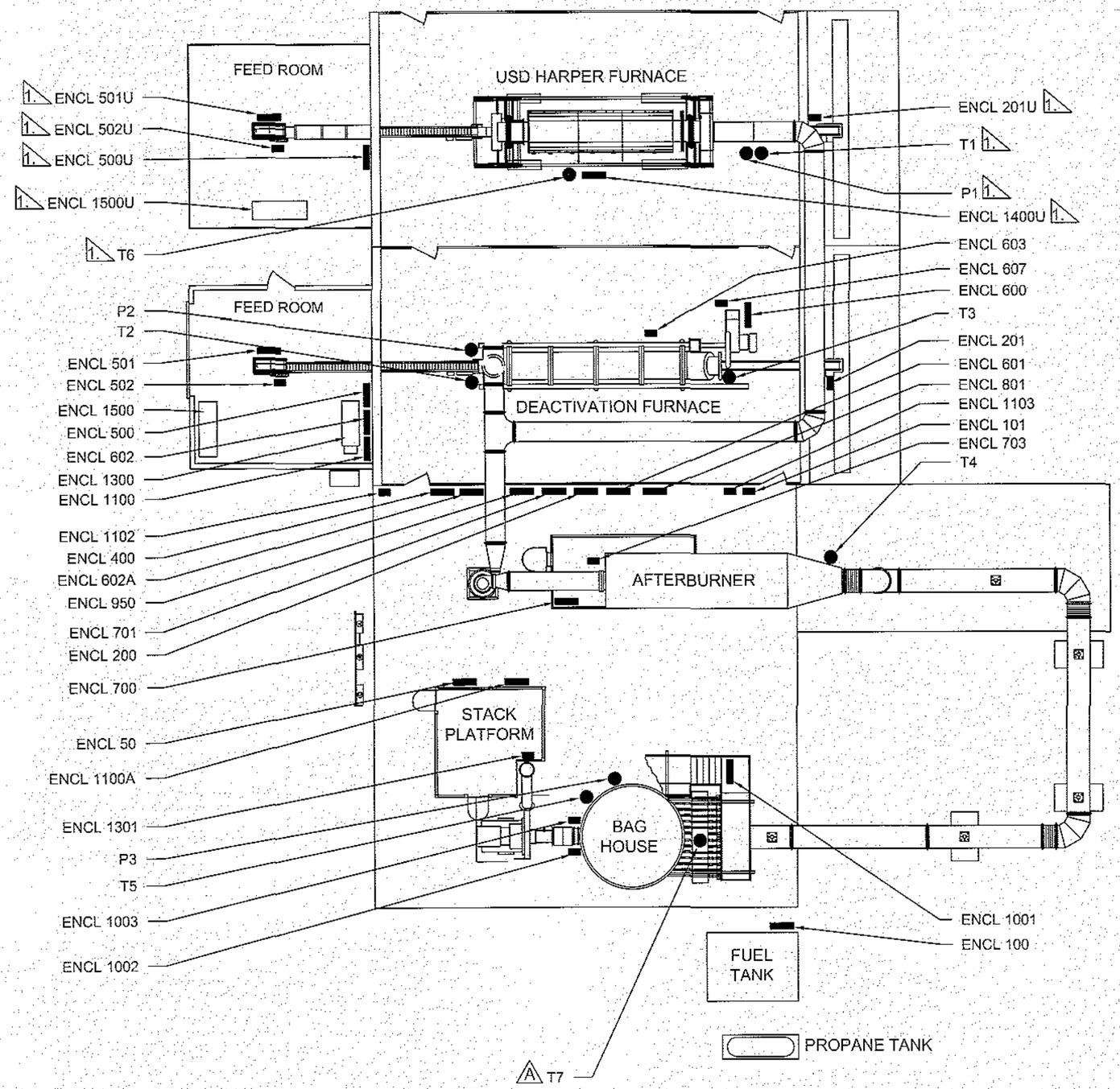

SCALE: .006

SITE ENCLOSURE LIST

NO.	ENCLOSURE
50	AIR COMPRESSOR MOTOR STARTER
100	FUEL OIL PUMP MOTOR STARTER
101	FUEL OIL FLOW RATE METER
200	DISCHARGE CONVEYOR MOTOR STARTER
201	DISCHARGE CONVEYOR MOTION DETECTOR
201U	DISCHARGE CONVEYOR MOTION DETECTOR
400	FEED CONVEYOR MOTOR STARTER
500	FEED RATE MONITORING VALVE ENCLOSURE
500U	FEED RATE MONITORING VALVE ENCLOSURE
501	FEED RATE MONITORING ENCLOSURE
501U	FEED RATE MONITORING ENCLOSURE
502	FEED RATE MONITORING CONTROL SWITCH
502U	FEED RATE MONITORING CONTROL SWITCH
600	ROTARY KILN BURNER CONTROL ENCLOSURE
601	ROTARY KILN COMBUSTION AIR BLOWER MOTOR STARTER
602	ROTARY KILN ROTATION VFD MOTOR STARTER
603	ROTARY KILN PROXIMITY SWITCH
606	ROTARY KILN SPEED CONTROL MOTOR
607	ROTARY KILN BURNER ACTUATOR
700	AFTERBURNER BURNER CONTROL ENCLOSURE
701	AFTERBURNER COMBUSTION AIR BLOWER MOTOR STARTER
703	AFTERBURNER BURNER ACTUATOR
801	BARREL CONVEYOR MOTOR STARTER
950	CYCLONE DOUBLE TIPPING VALVE MOTOR STARTER
1001	JT SYSTEM
1002	BAGHOUSE LEAK DETECTOR
1003	BAGHOUSE DELTA P TRANSMITTER
1100	DRAFT FAN VFD MOTOR STARTER
1100A	DRAFT FAN VFD MOTOR WIRING PULL BOX
1102	RETORT FEED END DRAFT TRANSMITTER
1103	SYSTEM DRAFT TRANSMITTER
1300	CONTINUOUS EMISSIONS MONITORING SYSTEM ENCLOSURE
1301	STACK AIR MASS FLOW TRANSMITTER
1400U	HARPER FURNACE CONTROL ENCLOSURE
1500	MAIN CONTROL ENCLOSURE
P1	PROCESS DRAFT SAMPLE PORT
P2	FEED END DRAFT SAMPLE PORT
P3	BAGHOUSE DELTA P SAMPLE PORT
T1	HARPER DISCHARGE THERMOCOUPLE
T2	ROTARY KILN FEED END THERMOCOUPLE
T3	ROTARY KILN BURNER END THERMOCOUPLE
T4	AFTERBURNER INLET THERMOCOUPLE
T5	BAGHOUSE OUTLET THERMOCOUPLE
T6	HARPER PROCESS THERMOCOUPLE
A T7	BAGHOUSE INLET THERMOCOUPLE

PROFESSIONAL ENGINEER No. 6895711-2202 DONALD FANNING 10/23/13 STATE OF UTAH

NOTES

A 1. ITEMS ARE AS BUILT AND IN SUPPORT OF USD HARPER FURNACE.
2. LOCATIONS ARE APPROXIMATE AND USED FOR IDENTIFICATION PURPOSES ONLY.
3. USD ENCLOSURES ARE SPECIFIED WITH A "U" AT THE END OF THE ENCLOSURE NUMBER.

		REV. A	UPDATES INDICATING AS BUILT SYSTEM. 23 OCT 2013
PROJ MGR: KURT FRAUGHTON	UNLESS OTHERWISE NOTED ALL DIMENSIONS ARE IN INCHES DO NOT SCALE DRAWING	US ARMY TOOELE ARMY DEPOT AMMUNITION EQUIPMENT DIRECTORATE	
AED: DON FANNING	TOLERANCES DECIMAL 2 PLACES ± .01 3 PLACES ± .005 FRACTIONAL ± 1/64 ANGULAR ± 0° 30' BREAK SHARP EDGES AND CORNERS	USD RD&D	
SAFETY		ENCLOSURE LAYOUT	
FINAL		ASSEMBLY	
NEXT ASSEMBLY	CHECKED BY: Troy Tate	SIZE: B / CAGE NO: 21624	DWG NO: USD HWI-PERMIT-15 / MOD
	DRAWN BY: mg	DATE: 1/28/2013	SCALE: AS NOTED / SHT: 1 of 1

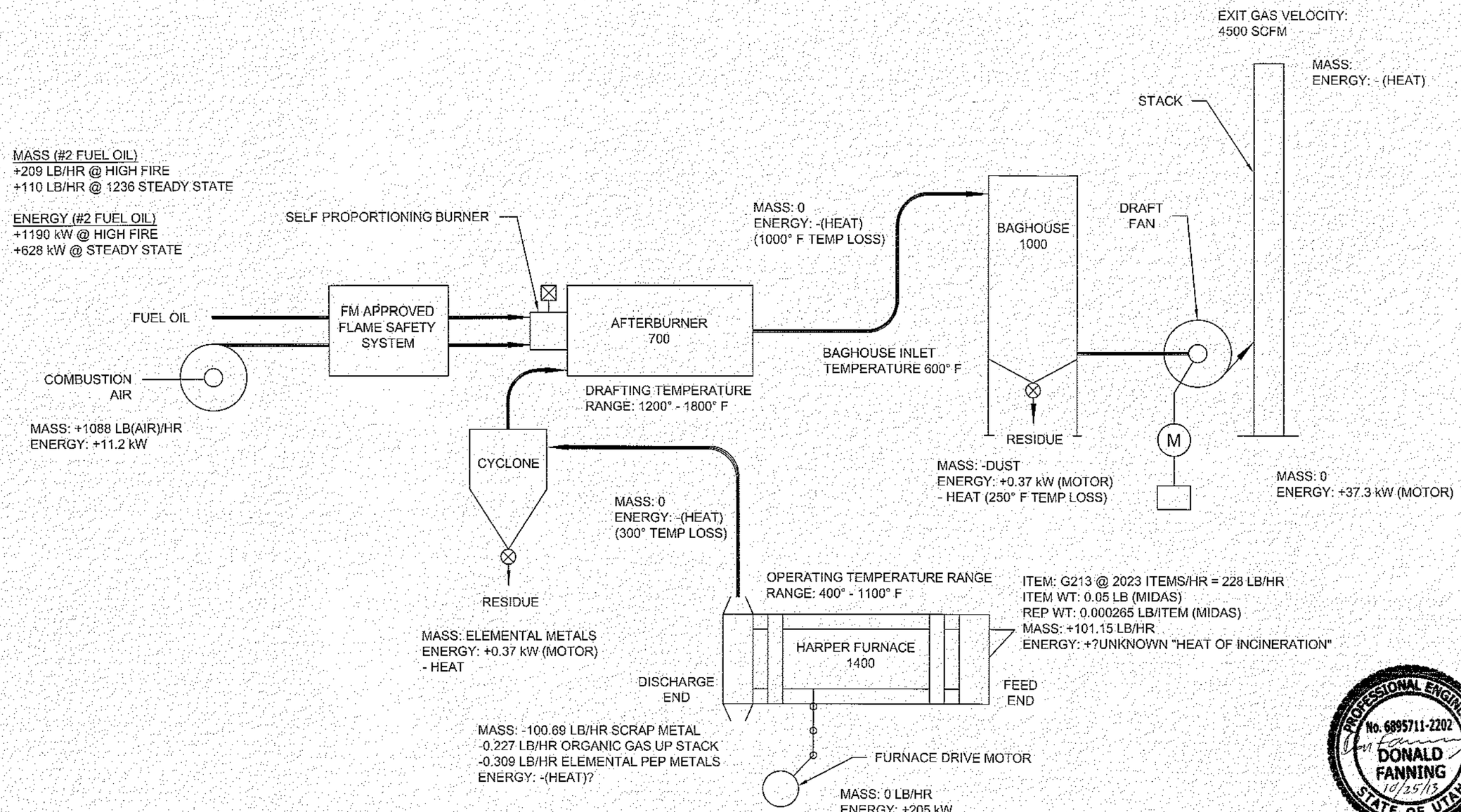

PROFESSIONAL ENGINEER
No. 6895711-2202
DONALD FANNING
10/25/13
STATE OF UTAH

NOTES:

1. ASSUME ALL ORGANIC PEP IS CONVERTED TO "NATURAL GAS"; PEP WITH METALS (LEAD STYPHNATE, ET. AL., CONVERTED TO NAT'L GAS AND ELEMENTAL METALS
2. "NATURAL GAS" GENERATED BY DECINERATION PROCESS TO BE OXIDIZED IN AFTERBURNER. DURING STEADY STATE, AFTERBURNER FUEL OIL CONSUMPTION WILL DROP.
3. STACK OUTPUT FOR NOX, CO, CO2 AND O2 NOT SHOWN IN THIS MASS BALANCE.
4. TOO MANY UNKNOWNS FOR ENERGY BALANCE, AT THIS TIME.

PROJ MGR: KURT FRAUGHTON	UNLESS OTHERWISE NOTED ALL DIMENSIONS ARE IN INCHES DO NOT SCALE DRAWING	US ARMY TOOELE ARMY DEPOT AMMUNITION EQUIPMENT DIRECTORATE			
AED: DON FANNING	TOLERANCES DECIMAL 2 PLACES ± .01 3 PLACES ± .005 FRACTIONAL ± 1/64 ANGULAR ± 0° 30' BREAK SHARP EDGES AND CORNERS	USD RD&D G213 MASS/ENERGY BALANCE DIAGRAM			
SAFETY					
FINAL					
NEXT ASSEMBLY	CHECKED BY: Troy Tate	SIZE: B	CAGE NO: 21624	DWG NO: USD HWI-PERMIT-16	MOD
	DRAWN BY: BRENT HUNT	DATE: 1/29/2013		SCALE: NO SCALE	SHT: 1 of 1

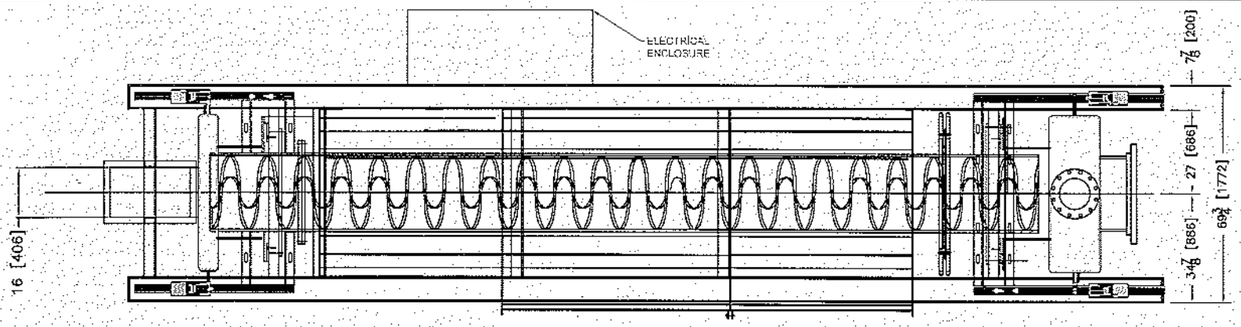

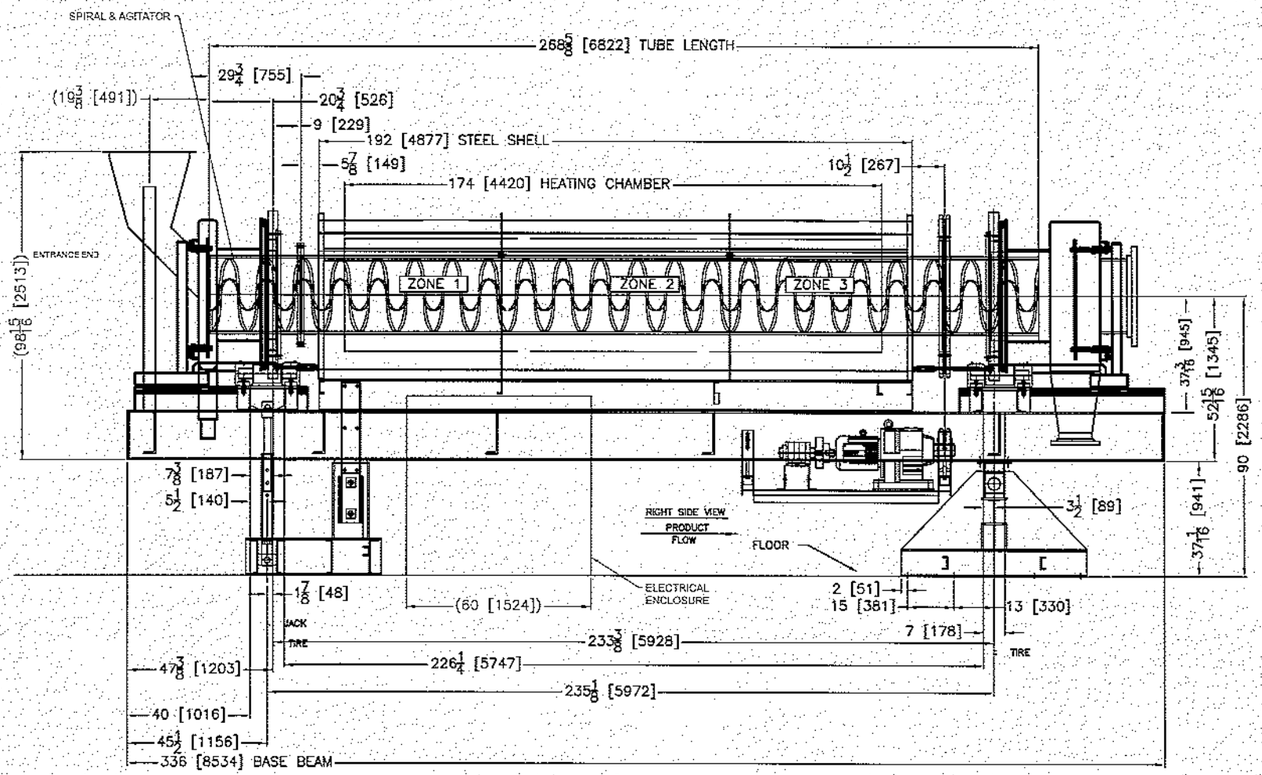

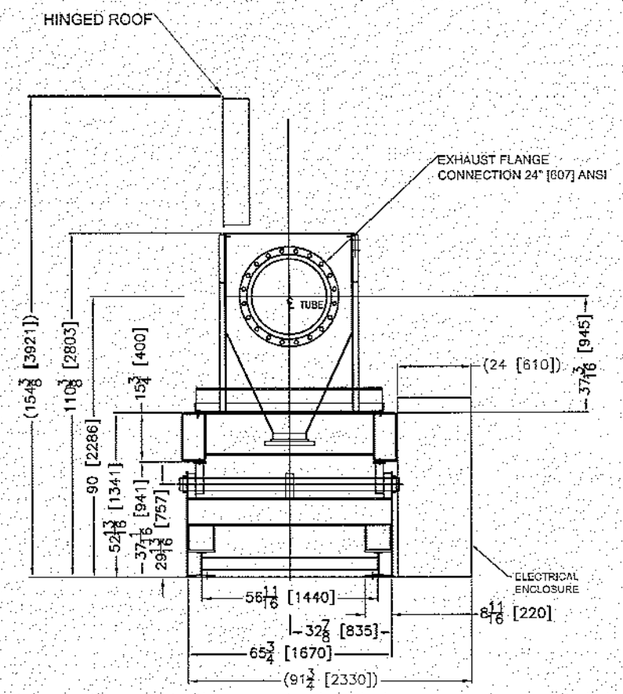

PROFESSIONAL ENGINEER
No. 6895711-2202
DONALD FANNING
10/25/13
STATE OF UTAH

METRIC = [MM]

REV	DESCRIPTION	DATE
	REVISIONS	

REV	BY	DESCRIPTION	DATE
		REVISIONS	

TOLERANCES UNLESS OTHERWISE SPECIFIED:
ANGLES: ±1°
FRACTIONS: ±1/16
DECIMALS: X.XXX ±0.005; X.XX ±0.015; X.X ±0.03; X ±0.09

DWN BY: RBM DATE: 9/18/12
CHKD BY: DATE:
APPD BY: DATE:
SIM TO:
REPLACES:

HARPER INTERNATIONAL CORPORATION CLAIMS PROPRIETARY RIGHTS TO THE INFORMATION DISCLOSED HEREON AND DOES NOT RELINQUISH EXCLUSIVE OWNERSHIP. THIS DRAWING OR REPRODUCTION THEREOF CANNOT BE USED OR DISCLOSED TO OTHERS, USED FOR THE PURPOSE OF PROCUREMENT OR MANUFACTURE BY THE EQUIPMENT OR COMPONENT PARTS SHOWN HEREON, OR USED FOR ANY OTHER PURPOSE IF DETRIMENTAL TO THE WELFARE OF HARPER INTERNATIONAL CORPORATION

Harper International Corporation
Lancaster, New York

MODEL NO.: NE-24D174-RTA-WC-1000
DWG TITLE: GENERAL ARRANGEMENT
DWG NO.: S-110099-01
SCALE: 1/2" = 1'-0"
SHEET: 1 OF 1
REV: 0

EQUIPMENT AND PIPING SYMBOLS

VALVE DESIGNATIONS

TYPE	OPEN	CLOSE
GATE		
GLOBE		
BALL		
BUTTERFLY/ DAMPER		
DIAPHRAGM		
NEEDLE		
PLUG		
KNIFE GATE		
PINCH		
CHECK		
BALL CHECK		
BALL FOOT		
RELIEF		
PRESSURE REGULATOR		
2-WAY VALVE SOL.	AS COMMON PORT	
3-WAY VALVE SOL.	AS COMMON PORT	
4-WAY VALVE SOL.	A/S ATMOS.	

BLOWERS/FAN

CENTRIFUGAL PUMP

ELECTRIC HEATING ELEMENT

WASHOUTS

MIXER

RECIRCULATION PUMPS

WATER FILTER

ROTAMETER

PADDLEWHEEL TYPE FLOWMETER

SPRAY NOZZLE

HOSE CONNECTION

FLANGE CONNECTION

BLIND FLANGE

SAMPLE PORT

VORTEX FLOWMETER

MAGMETER

ELECTRIC TRACED LINE

FLEXIBLE HOSE

PIPE PLUG

PIPE CAP

"Y" STRAINER

CLIENTS SUMP FLOOR DRAIN

IN LINE IMMERSION HEATER

EXPANSION JOINT

ORIFICE

REDUCER

STEAM TRAP

DOUBLE ACTING PISTON ACTUATOR

AP AIR PURGE

WP WATER PURGE

P PUMP SEAL PURGE

PP PRESSURE GAUGE TAP POINT

TP XXX CLIENT HIC

TIE POINT OR DISTRIBUTION NODE

IN-LINE MIXER

TRANSFORMER

ELECTRIC MOTOR

AIR FILTER

HEAT EXCHANGER

SILENCER

SIMPLEX STRAINER

FILTER

ACTUATED ON/OFF CONTROL VALVE WITH SPRING RETURN

ACTUATED ON/OFF CONTROL VALVE DOUBLE ACTING

ACTUATED THROTTLING CONTROL VALVE W/SEPARATE I/P

INSTRUMENTATION SYMBOLS

- LOCALLY MOUNTED INSTRUMENT
- PANEL MOUNTED INSTRUMENT
- INSTRUMENT WITH TWO MEASURED VARIABLES OR FUNCTIONS
- PANEL MOUNTED INSTRUMENT (INTERNAL)
- INSTRUMENT FUNCTION IN HMI/PLC
- AIR SUPPLY
- HMI/PLC DISPLAY OR FUNCTION
- PANEL ALARM LIGHT
- INTERLOCK IMPLEMENTED WITH WIRE & HARDWARE.
- HMI/PLC PROGRAM SOFTWARE BASED INTERLOCK

PIPE MATERIAL CODES

CODE	RATING	MATERIAL	SERVICE LIMIT TEMP. GR C	SERVICE LIMIT PRESS (BAR)	CORROSION ALLOWANCE	FLUIDS
CS	150#	CARBON STEEL	-	-	1	AIR
-	-	-	-	-	1	-
-	-	-	-	-	-	-
-	-	-	-	-	-	-
-	-	-	-	-	-	-

INSULATION CODES

INSULATOR	TEMP IN THE PIPE	1/2	3/4	1	1-1/4	1-1/2	2	2-1/2	3	4	5	6	8	10	12	FLAT
		INSULATOR MARKS														
A	50 - 100	25	25	25	25	30	30	30	30	30	40	40	40	40	40	50
B	100 - 150	30	30	30	30	40	40	40	40	40	50	50	50	50	50	60
C	150 - 200	30	40	40	40	40	40	50	50	50	50	50	60	60	60	75
D	200 - 250	40	40	40	40	50	50	50	50	60	60	60	75	75	75	100

TEMPERATURE	THERMAL INSULATOR	NOTE
50 - 100°C	A	a
100 - 150°C	B	a
150 - 200°C	C	a
200 - 250°C	D	a
PREVENTION OF DEW	H	b
0 - 5°C	E	c
-10 - 0°C	F	c
-20 - -10°C	G	c

NOTES:

a.) THERMAL INSULATION FOR 50°C – 250°C, THERMAL INSULATION MAGNESIUM-CARBONATE.

b.) PREVENTION OF DEW.
USE GLASS WOOL FOR PREVENTION OF DEW.
THICKNESS: $\frac{3}{4}$" FOR BELOW 1-1/2B

c.) THERMAL INSULATION
FOR 0 to -20 °C

LINE DESIGNATION

LINE NUMBER

8-EX-1402-SS1-I(300°)

- DIAMETER (INCHES)
- FLUID - EXHAUST (PROCESS)
- SEQUENTIAL NUMBER - 1402
- CLASS MATERIAL - AISI 304
- INSULATION CLASS - 70 mm MINERAL WOOL

FLUID CODES

FLUID	FLUID ITEM
AIR ATMOSPHERE	AIR
-	-
-	-
-	-
-	-

ABBREVIATIONS

TOR - TORQUE
AE(O2) - ANALYZER ELEMENT (OXYGEN)
AE(DP) - ANALYZER ELEMENT (DEW POINT)
ES - EMERGENCY STOP
FO - FAIL OPEN
FC - FAIL CLOSED
NO - NORMALLY OPEN
NC - NORMALLY CLOSED
ST/SP - START/STOP
LFT - LEFT
RT - RIGHT
DIS - LOCAL DISCONNECT SWITCH
PRO - PROCESS STOP

ISA INSTRUMENTATION IDENTIFICATION TABLE

	FIRST LETTER(S) PROCESS VARIABLE	FIRST LETTER(S) MODIFIER	SUCCEEDING LETTERS PASSIVE READOUT OR FUNCTION	SUCCEEDING LETTERS OUTPUT FUNCTION	SUCCEEDING LETTERS MODIFIER	
A	ANALYSIS		ALARM			A
B	BURNER, COMBUSTION		USER CHOICE	USER CHOICE	USER CHOICE	B
C	USER CHOICE	CONDUCTIVITY		CONTROL	CLOSE	C
D	USER CHOICE	DIFFERENTIAL				D
E	VOLTAGE (EMF)		SENSOR (PRIM. ELEMENT)			E
F	FLOW, RATE	FRACTION, RATIO				F
G	USER CHOICE		GLASS, VIEWING DEVICE			G
H	HAND (MANUAL OPERATE)				HIGH	H
I	CURRENT (ELECTRICAL)		INDICATE			I
J	POWER	SCAN				J
K	TIME, SEQUENCE	TIME RATE CHANGE		CONTROL STATION		K
L	LEVEL		LIGHT (PILOT)		LOW	L
M	USER CHOICE	MOMENTARY			MIDDLE, INTERMEDIATE	M
N	USER CHOICE	WINDING	USER CHOICE	USER CHOICE	USER CHOICE	N
O	USER CHOICE		ORIFICE (RESTRICT)		OPEN	O
P	PRESSURE, VACUUM		POINT (TEST CONN)			P
Q	QUANTITY, EVENT	INTEGRATE, TOTALIZE				Q
R	RADIATION		RECORD			R
S	SPEED, FREQUENCY	SAFETY		SWITCH		S
T	TEMPERATURE			TRANSMIT		T
U	MULTIVARIABLE		MULTIFUNCTION	MULTIFUNCTION	MULTIFUNCTION	U
V	VIBRATION, MECH. ANALYSIS			VALVE, DAMPER, LOUVER		V
W	WEIGHT, FORCE		WELL			W
X	UNCLASSIFIED	X AXIS	UNCLASSIFIED	UNCLASSIFIED	UNCLASSIFIED	X
Y	EVENT, STATE, OR PRESENCE	Y AXIS		RELAY, COMPUTE, CONVERT		Y
Z	POSITION, ANGLE	Z AXIS		DRIVE, ACTUATOR, FINAL CONTROL ELEMENT		Z

INST. & VALVE TAG MAPPING SCHEME

INSTRUMENTS

PI-XXX
- DEVICE TYPE
- UNIQUE NUMBER

VALVES

VXXX
- UNIQUE NUMBER
- IDENTIFIER (IF REQUIRED)

TIE POINTS

TP-XXX
- UNIQUE NUMBER

REVISION HISTORY				
ZONE	REV	DESCRIPTION	DATE	APPROVED
	0	INITIAL RELEASE	2-25-13	CHV
SHT 2	1	UPDATED NOTE-6 AND INTERLOCK-3 TEXT	8-14-13	CHV

PROFESSIONAL ENGINEER No. 6895711-2202 DONALD FANNING 10/25/13 STATE OF UTAH

GENERAL NOTES:

1. ALL ACTUATED COOLING WATER VALVES [illegible] OPERATION.
2. ALL PRESSURE TRANSMITTERS AND DIFFE[illegible] TRANSMITTER IMPULSE LEGS SHALL BE SELF-DRAINING WHER[illegible] PERMITS.
3. WHERE APPLICABLE, ALL PIPING SHALL HAVE HIGH POINT VENTS AND LOW POINT DRAINS.
4. CONTROL ROOM/ POWER ROOM TO HAVE DEDICATED HVAC SYSTEM.
5. FOR ANALYTICAL INSTRUMENTS OR FUNCTIONS, THE ANALYZED PARAMETER, I.E. PH, CONDUCTIVITY, VISCOSITY, ETC., SHALL BE INDICATED OUTSIDE THE BUBBLE. THIS INFORMATION SHALL APPEAR FOR ONLY ONE BUBBLE WITHIN THE LOOP, FOR EXAMPLE;

AE XXX PH

STANDARD TO METRIC CONVERSION					
INCH	METRIC	INCH	METRIC	INCH	METRIC
1/8"	3mm	2"	50mm	10"	250mm
1/4"	6mm	2-1/2"	65mm	12"	300mm
3/8"	10mm	3"	76mm	14"	350mm
1/2"	13mm	3-1/2"	90mm	16"	400mm
3/4"	20mm	4"	100mm	18"	450mm
1"	25mm	5"	125mm	20"	500mm
1-1/4"	32mm	6"	150mm	22"	550mm
1-1/2"	38mm	8"	200mm	24"	600mm

PIPING DIMENSIONS ARE GIVEN IN METRIC. PIPING SUPPLY, IN GENERAL, WILL BE THE ANSI EQUIVALENT OF METRIC DIMENSIONS.

- PROCESS & SERVICE LINE (BY HARPER)
- CLIENTS SCOPE OF SUPPLY
- ELECTRICAL/LOGIC SIGNAL
- INSTRUMENT AIR
- CAPILLARY TUBING OR IMPLUSE LINE
- MECHANICAL LINKAGE
- SKID OR EQUIPMENT BOUNDARY
- ROUTING / DRAWING NUMBER — DRAWING INTERCONNECTION ARROW
- DRAIN TO CLIENT SUMP

PROPRIETARY NOTICE:

HARPER INTERNATIONAL CORPORATION CLAIMS PROPRIETARY RIGHTS TO THE INFORMATION HEREON AND DOES NOT RELINQUISH EXCLUSIVE OWNERSHIP. THIS DRAWING OR REPRODUCTION THEREOF CANNOT BE USED TO DISCLOSE TO OTHERS, USED FOR THE PURPOSE OF PROCUREMENT OR MANUFACTURE OF THE EQUIPMENT OR COMPONENT PARTS SHOWN HEREON, OR USED FOR ANY PURPOSE IF DETRIMENTAL TO THE WELFARE OF HARPER INTERNATIONAL CORPORATION

UNLESS OTHERWISE SPECIFIED DIMENSIONS ARE IN INCHES
TOLERANCES:
ANGLES: ±1°
FRACTIONS: ±1/16"
DECIMALS: .XX ±.03
.XXX ±.005
INTERPRET DIM AND TOL PER ASME Y 14.5-2009
DO NOT SCALE DRAWING
THIRD ANGLE PROJECTION

FJ349-10
JOB HISTORY

MODEL: NS-24D174-RTA-650
DWN BY: RRB DATE: 1-21-13
CHKD BY: JF DATE: 2-12-13
APPD BY: CHV DATE: 2-25-13
MFG: - DATE: -
ECCN EAR99

Harper International Corporation
Lancaster, New York

TITLE
PIPING & INSTRUMENTATION DIAGRAM-ROTARY FURNACE

SIZE D | CAGE CODE 27334 | DRAWING NUMBER XSP-0008 | REV 1
SCALE DNS | WT | SHEET 1 OF 2

SOFTWARE: AutoCAD

FOR REVISION HISTORY SEE SHEET 1

NOTES:

1 - TO BE USED TO CONTROL VFD OF CLIENT'S BLOWER (7000 CFM AVAILABLE) AND FOR REAL-TIME ACCURATE TEMPERATURE READINGS. THERMOCOUPLE TO BE WIRED FOR HARPER'S CONTROL PANEL/HMI FOR INDICATION ALARM ONLY (LIGHT OR FLASHING INDICATOR ON SCREEN). TERMINAL I/O CONTACTS FOR CLIENT'S USE.
2 - PROCESS AIR IS OUTDOOR AIR, DRAWN IN THROUGH THE FUNNEL.
3 - FLANGE RING FOR CLIENT'S EXHAUST PIPE (24" OD). CLIENT'S EXHAUST PIPE TO BE PROPERLY SUPPORTED TO MINIMIZE STRESS ON THE ROTARY UNIT (BY OTHERS).
4 - 3/4" NPT PLUGGED COUPLING FOR CLIENT'S USE. CLIENT'S THERMOCOUPLE (DISCHARGE AIR TEMP) WITH BE WIRED TO CLIENT'S CONTROLS.
5 - HARPER POWER CUBICLE(S) AND CONTROL PANEL LOCATED NEAR ROTARY BASE STAND. HMI ENCLOSURE WILL BE LOCATED IN CLIENT'S CONTROL SHED.
6 - THE CLIENT WILL IMPLEMENT AN "OPERATIONAL STOP" BUTTON IN THEIR CONTROL SYSTEM; WHEN THIS BUTTON IS PRESSED THE CLIENT'S FEED CONVEYOR WILL STOP. THE OPERATOR MAY THEN PROCEED TO THE HARPER HMI IN THE CONTROL SHED TO START A CONTROLLED SHUTDOWN OF THE ROTARY FURNACE SYSTEM, AS DETERMINED BY CLIENTS OPERATIONAL PROTOCOL. 1
7 - DRIVE WILL BE EQUIPPED WITH A JOG BUTTON THRU THE HMI PANEL.
8 - "EMERGENCY REVERSE" VIA HMI PANEL WITH LOCKOUT AND OPERATOR OVERRIDE, ALARM WARNING AND CHAIN IDLER DISCONNECT WARNING SCREEN.
9 - ALL HMI DISPLAYS TO USE ENGLISH UNITS.

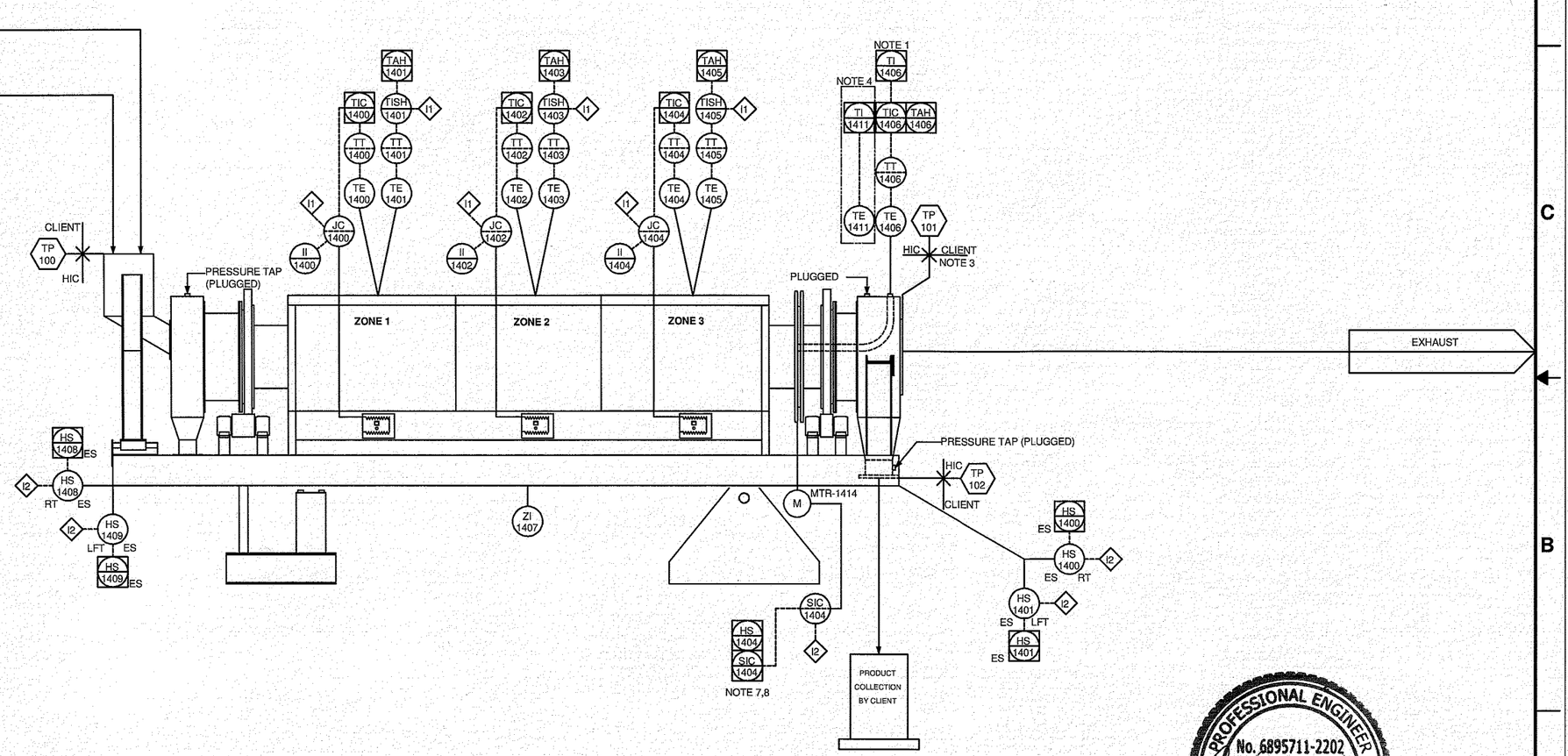

PROFESSIONAL ENGINEER
No. 6895711-2202
DONALD FANNING
10/25/13
STATE OF UTAH

INTERLOCK LIST:

I1 - ZONE SCR SHALL POWER OFF PER FOLLOWING CONDITIONS:
-ZONE OVER-TEMPERATURE; TISH
-ZONE SCR FAULT
I2 - MAINTENANCE EMERGENCY STOP; (QTY 4 TOTAL) IF ANY ONE IS ACTIVATED IT SHALL SHUT DOWN MECHANICAL MOTION ONLY (TUBE DRIVE AND CLIENT'S FEED BELT). 1
I3 - EMERGENCY STOP - IN CLIENT'S CONTROL SHED-LOCATED ON THE HARPER HMI PEDESTAL; IF THIS BUTTON IS PRESSED IT WILL SHUT EVERYTHING DOWN AS THE OPERATORS ARE EVACUATING THE AREA.

SOFTWARE: AutoCAD

SIZE	CAGE CODE	DRAWING NUMBER	REV
D	27334	XSP-0008	1
SCALE -	WT	SHEET 2 OF 2	

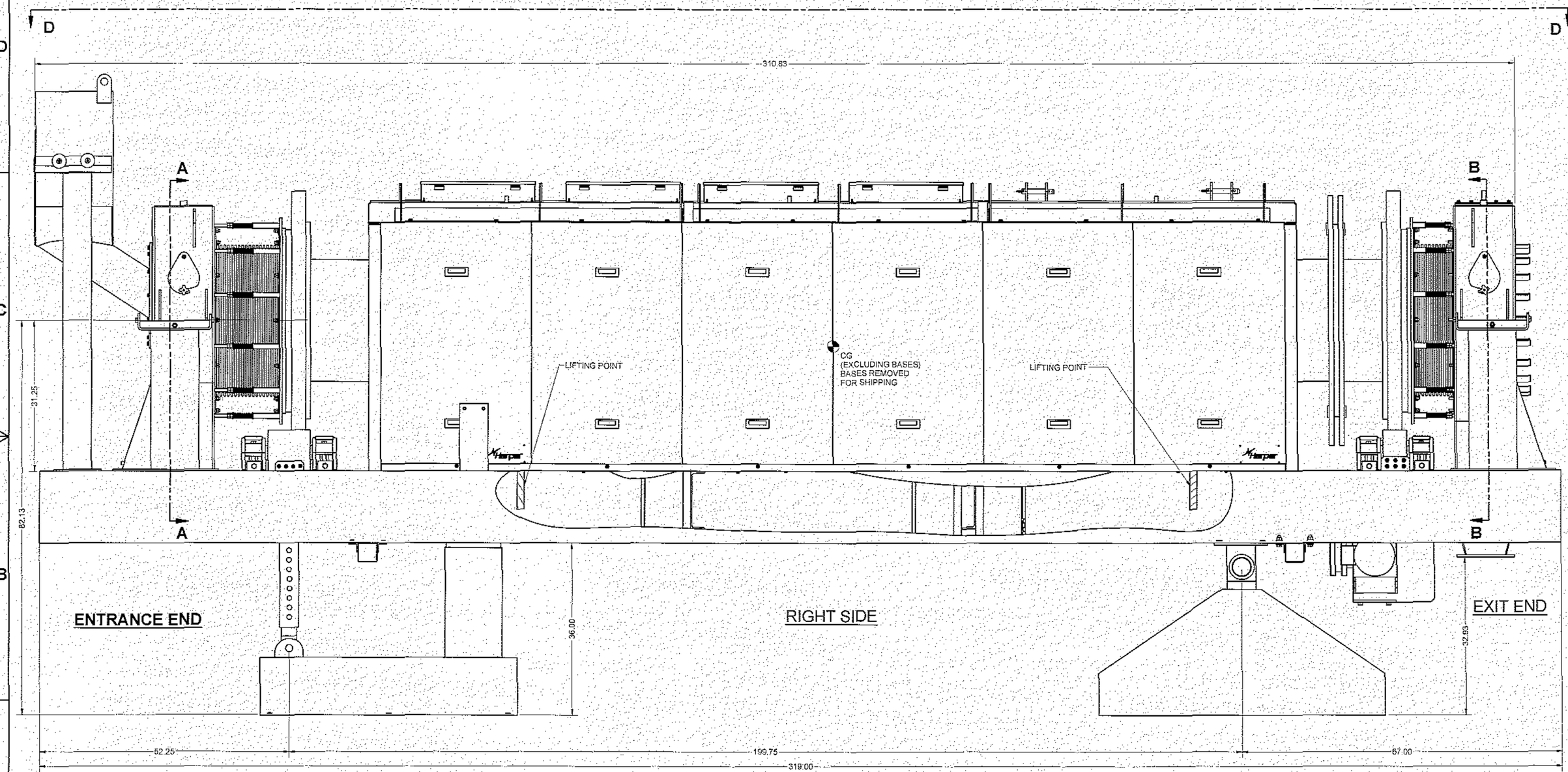

PROFESSIONAL ENGINEER
No. 6895711-2202
DONALD FANNING
10/25/13
STATE OF UTAH

UNLESS OTHERWISE SPECIFIED DIMENSIONS ARE IN INCHES TOLERANCES: ANGLES: ± 1° FRACTIONS: ± 1/16" DECIMALS: .XX ± .02 .XXX ± .005 INTERPRET DIM AND TOL PER ASME Y14.5-2009 DO NOT SCALE DRAWING THIRD ANGLE PROJECTION	MODEL:		Harper International Corporation Lancaster, New York
	DWN BY:	DATE: 12/12/2012	TITLE NS-24D174-RTA-650
	CHKD BY:	DATE:	
	APPD BY:	DATE:	
	MFG:	DATE:	
JOB HISTORY	ECCN EAR99		SIZE D · CAGE CODE 27334 · DRAWING NUMBER YRF-0097 · REV B SCALE · WT · SHEET 1 OF 7

SOFTWARE: INVENTOR

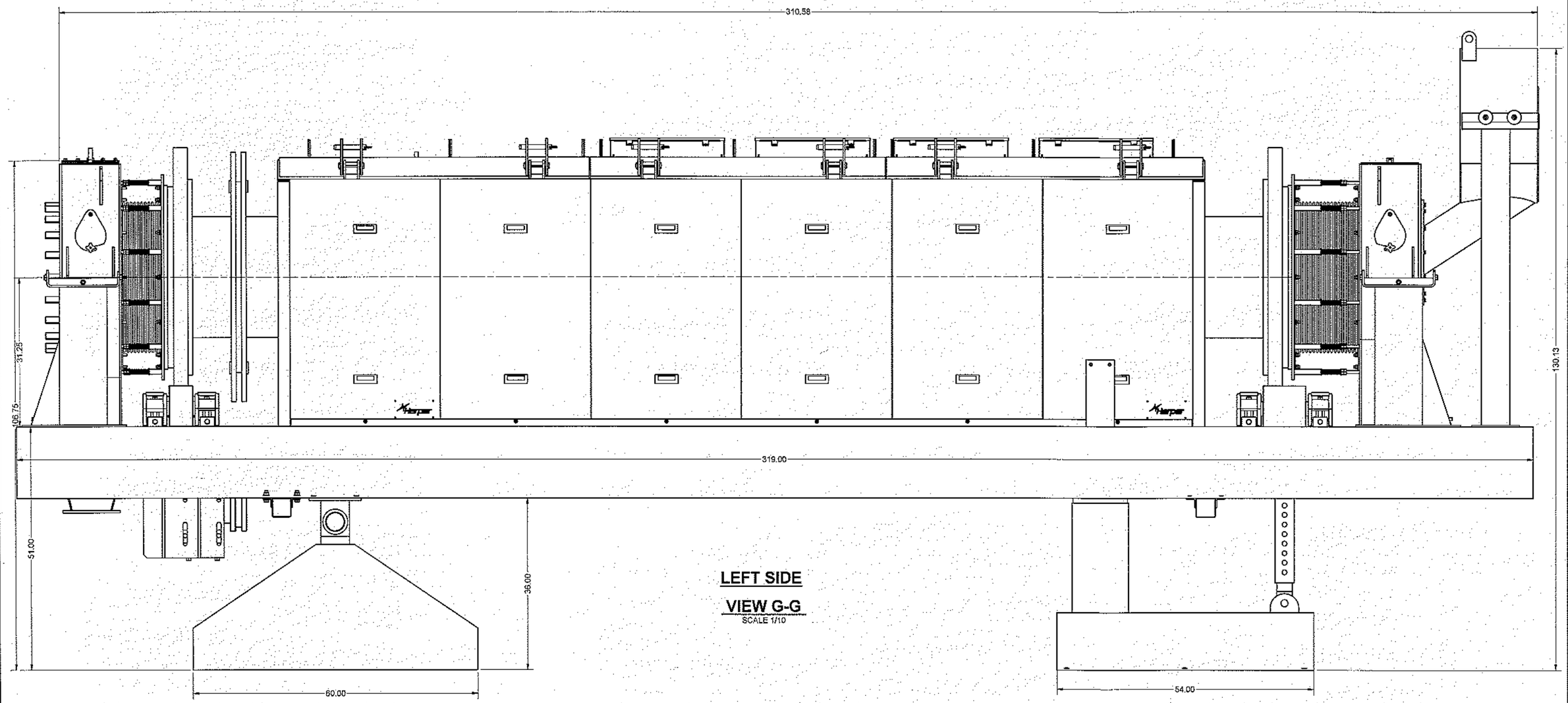

LEFT SIDE

VIEW G-G

SCALE 1/10

PROFESSIONAL ENGINEER
No. 6895711-2202
DONALD FANNING
01/25/13
STATE OF UTAH

JOB HISTORY	UNLESS OTHERWISE SPECIFIED DIMENSIONS ARE IN INCHES TOLERANCES: ANGLES: ± 1° FRACTIONS: ± 1/16" DECIMALS: .XX ± .02 .XXX ± .005 INTERPRET DIM AND TOL PER ASME Y14.5-2009 DO NOT SCALE DRAWING THIRD ANGLE PROJECTION	MODEL: DWN BY: DATE: 12/12/2012 CHKD BY: DATE: APPD BY: DATE: MFG: DATE: ECCN EAR99	Harper International Corporation Lancaster, New York TITLE NS-24D174-RTA-650 SIZE D · CAGE CODE 27334 · DRAWING NUMBER YRF-0097 · REV B SCALE · WT · SHEET 2 OF 7

SOFTWARE: INVENTOR

ZONE	REV	REVISION HISTORY DESCRIPTION	DATE	APPROVED
	B	INITIAL RELEASE		

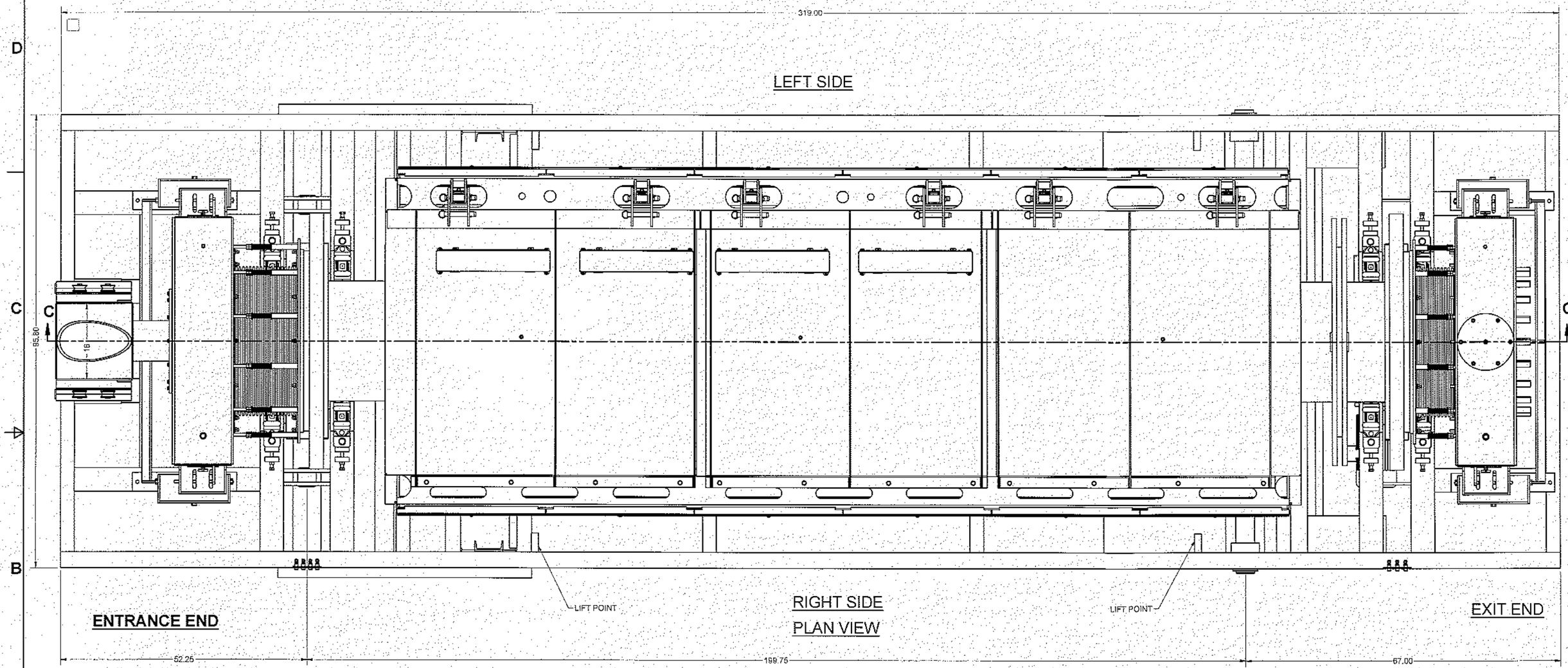

PROFESSIONAL ENGINEER
No. 6895711-2202
DONALD FANNING
10/25/13
STATE OF UTAH

PROPRIETARY NOTICE:

HARPER INTERNATIONAL CORPORATION CLAIMS PROPRIETARY RIGHTS TO THE INFORMATION HEREON AND DOES NOT RELINQUISH EXCLUSIVE OWNERSHIP. THIS DRAWING OR REPRODUCTION THEREOF CANNOT BE USED TO DISCLOSE TO OTHERS, USED FOR THE PURPOSE OF PROCUREMENT OR MANUFACTURE OF THE EQUIPMENT OR COMPONENT PARTS SHOWN HEREON, OR USED FOR ANY PURPOSE IF DETRIMENTAL TO THE WELFARE OF HARPER INTERNATIONAL CORPORATION.

SEE SEPARATE PARTS LIST

UNLESS OTHERWISE SPECIFIED DIMENSIONS ARE IN INCHES

TOLERANCES:
ANGLES: ±1°
FRACTIONS: ±1/16"
DECIMALS: .XX ±.02
.XXX ±.005

INTERPRET DIM AND TOL PER ASME Y14.5-2009

DO NOT SCALE DRAWING

THIRD ANGLE PROJECTION

JOB HISTORY

MODEL:		
DWN BY:	DATE: 12/12/2012	
CHKD BY:	DATE:	
APPD BY:	DATE:	
MFG:	DATE:	
ECCN	EAR99	

Harper International Corporation
Lancaster, New York

TITLE
NS-24D174-RTA-650

SIZE	CAGE CODE	DRAWING NUMBER	REV
D	27334	YRF-0097	B

SCALE | WT | SHEET 3 OF 7

SOFTWARE: INVENTOR

FOR REVISION HISTORY SEE SHEET 1

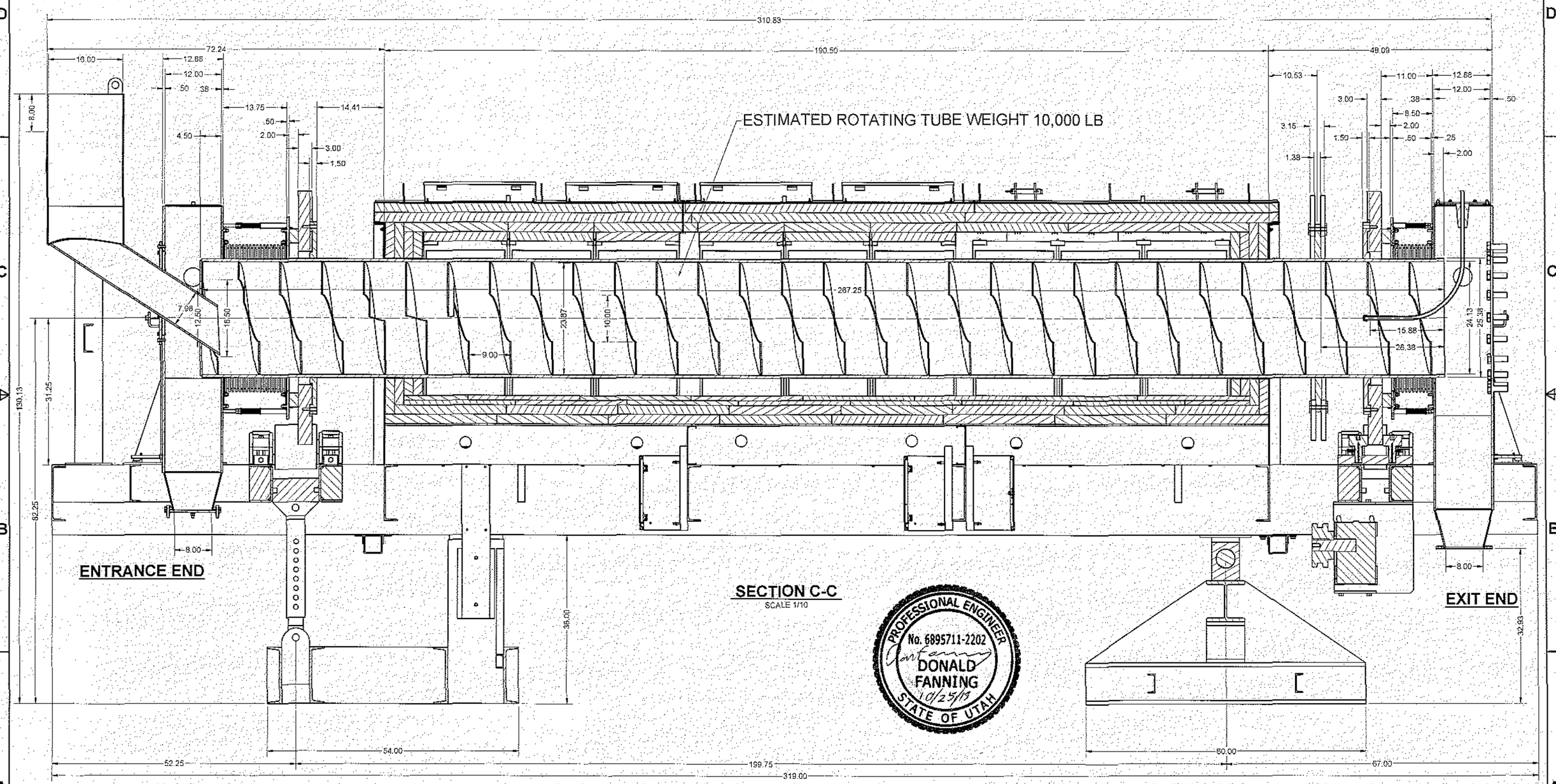

SIZE	CAGE CODE	DRAWING NUMBER	REV
D	27334	YRF-0097	B
SCALE		SHEET 4 OF 7	

SOFTWARE: INVENTOR

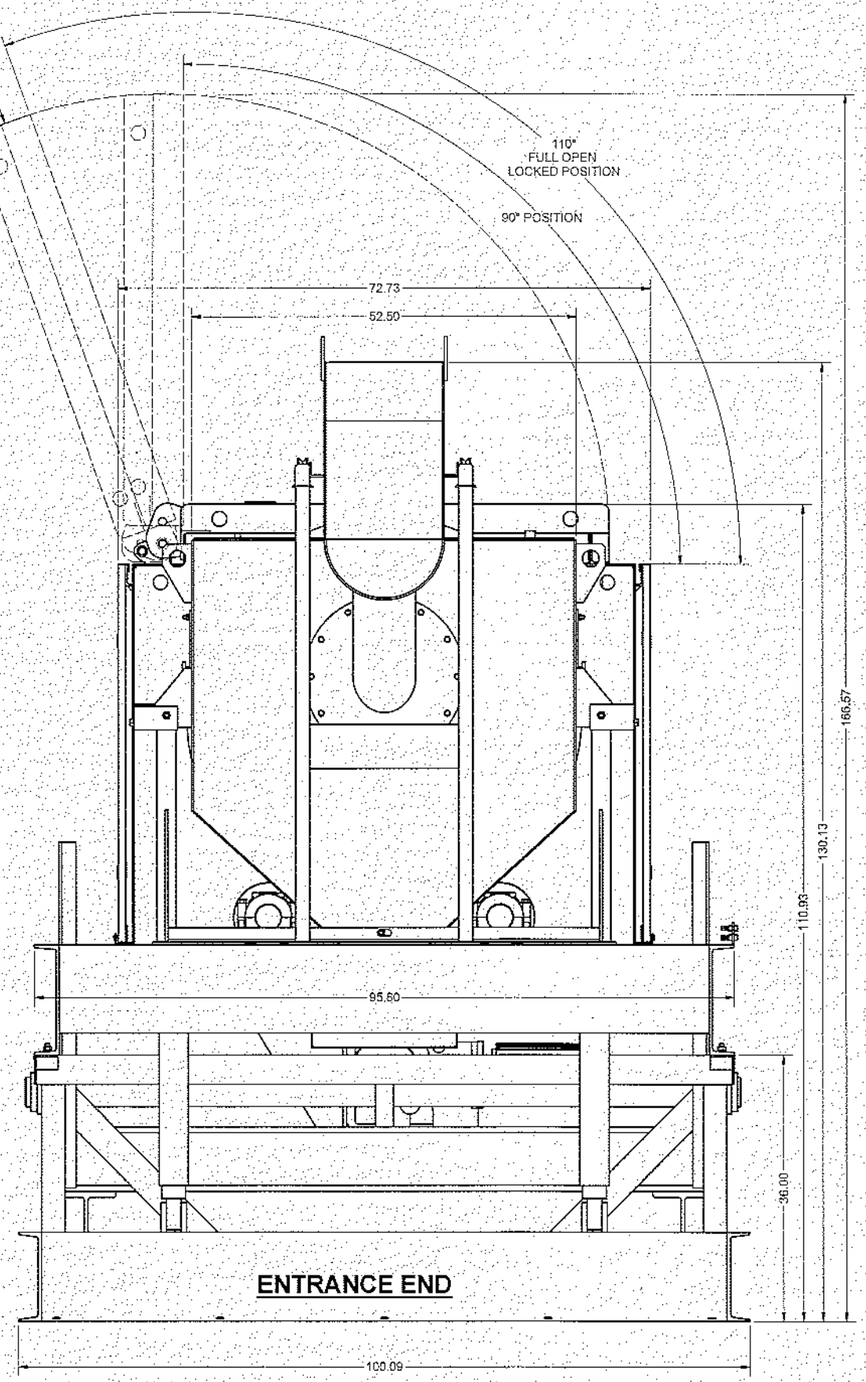

ENTRANCE END

VIEW A-A
SCALE 1/10

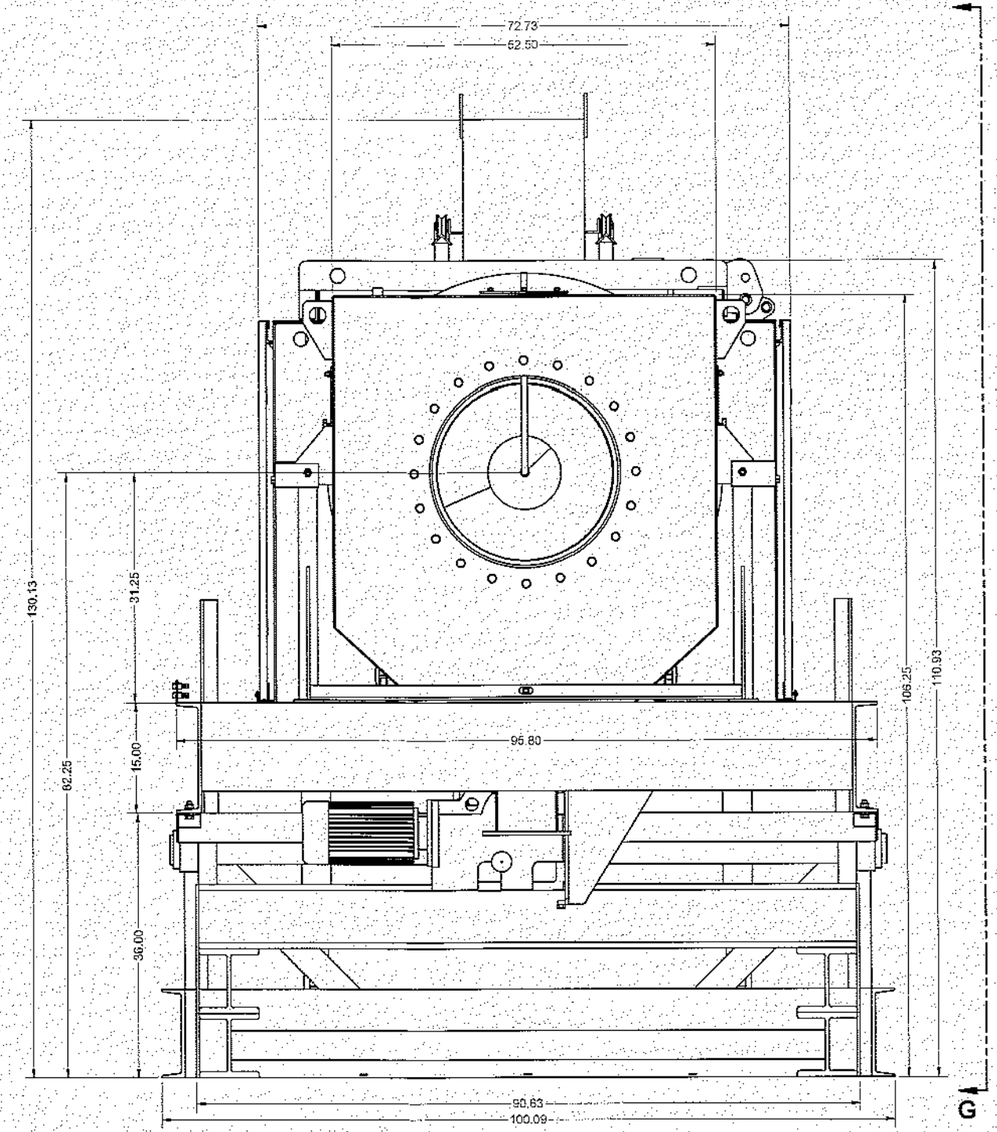

VIEW B-B
SCALE 1/10

EXIT END

PROFESSIONAL ENGINEER
No. 6895711-2202
DONALD FANNING
10/25/13
STATE OF UTAH

UNLESS OTHERWISE SPECIFIED DIMENSIONS ARE IN INCHES TOLERANCES: ANGLES: ±1° FRACTIONS: ±1/16" DECIMALS: .XX ±.02 .XXX ±.005 INTERPRET DIM AND TOL PER ASME Y14.5-2009 DO NOT SCALE DRAWING	MODEL:		Harper International Corporation Lancaster, New York
	DWN BY:	DATE: 12/12/2012	TITLE NS-24D174-RTA-650
	CHKD BY:	DATE:	
	APPD BY:	DATE:	
	MFG:	DATE:	SIZE D · CAGE CODE 27334 · DRAWING NUMBER YRF-0097 · REV B
JOB HISTORY	THIRD ANGLE PROJECTION	ECCN EAR99	SCALE · WT · SHEET 5 OF 7

SOFTWARE: INVENTOR

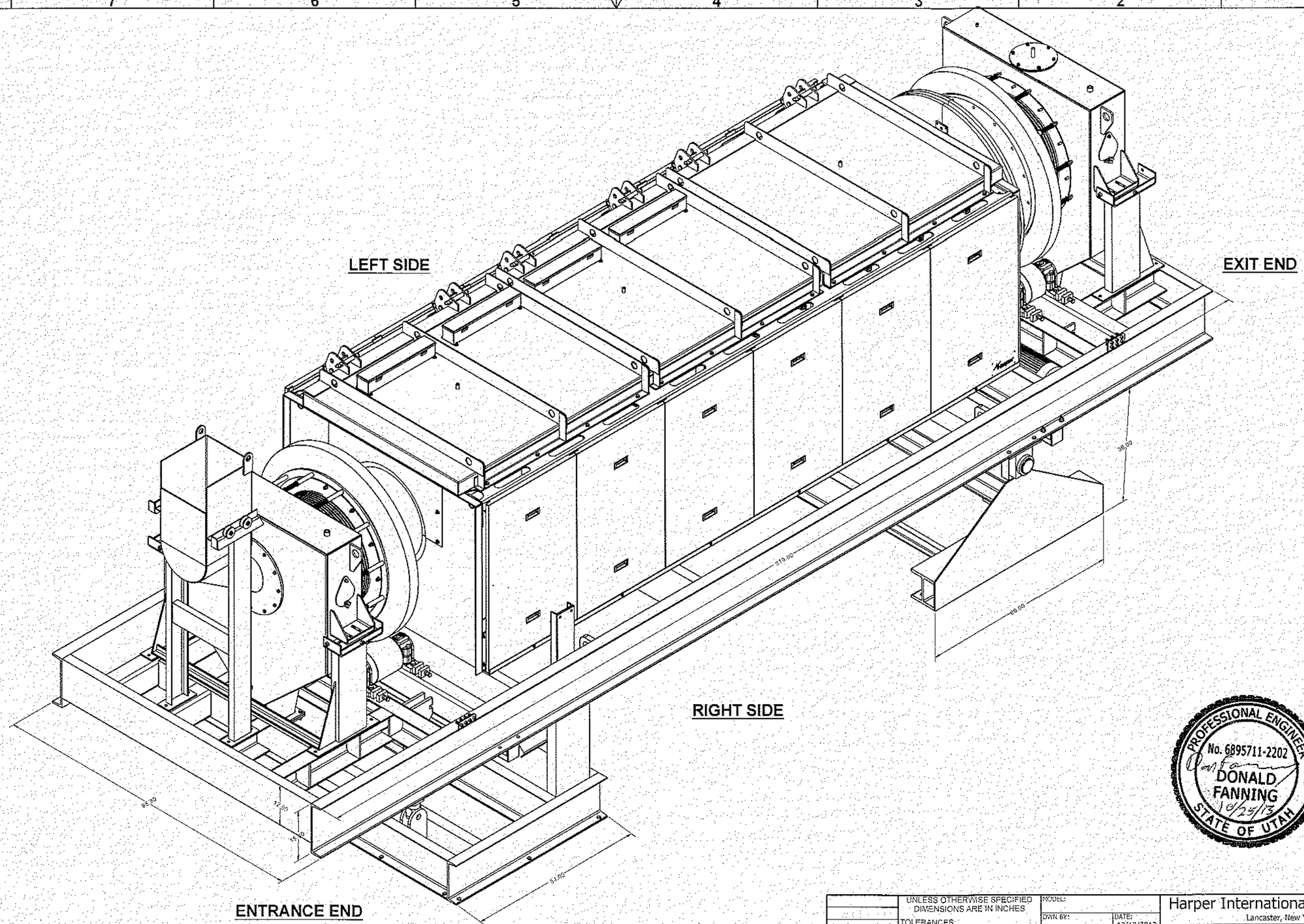

PROFESSIONAL ENGINEER
No. 6895711-2202
DONALD FANNING
10/25/13
STATE OF UTAH

UNLESS OTHERWISE SPECIFIED DIMENSIONS ARE IN INCHES TOLERANCES: ANGLES: ±1° FRACTIONS: ±1/16" DECIMALS: .XX ±.02 .XXX ±.005 INTERPRET DIM AND TOL PER ASME Y14.5-2009 DO NOT SCALE DRAWING THIRD ANGLE PROJECTION	MODEL:		Harper International Corporation Lancaster, New York
	DWN BY:	DATE: 12/12/2012	TITLE
	CHKD BY:	DATE:	NS-24D174-RTA-650
	APPD BY:	DATE:	
	MFG:	DATE:	SIZE D · CAGE CODE 27334 · DRAWING NUMBER YRF-0097 · REV B
JOB HISTORY	ECCN EAR99		SCALE · WT · SHEET 6 OF 7

SOFTWARE: INVENTOR

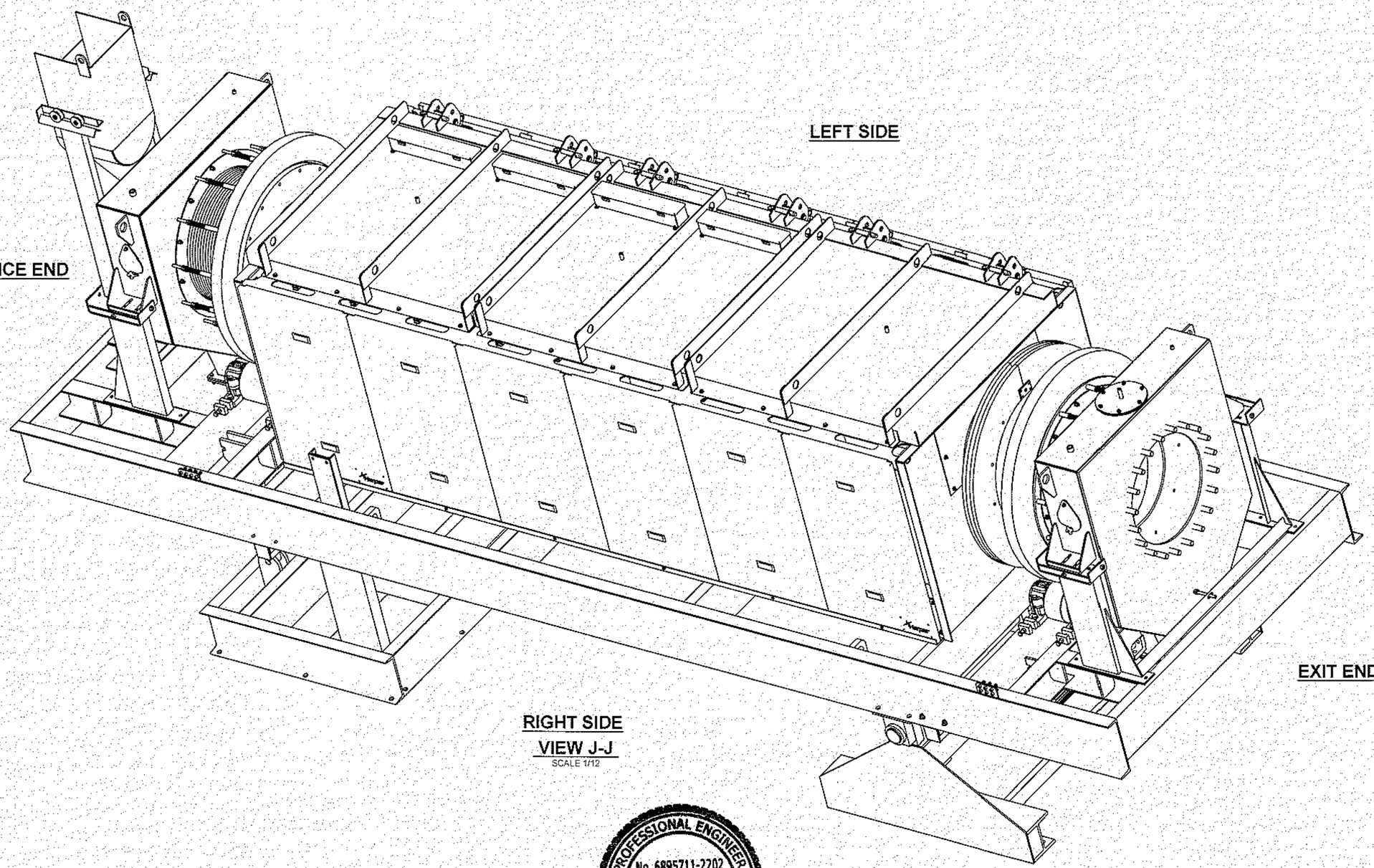

PROFESSIONAL ENGINEER
No. 6895711-2202
DONALD FANNING
10/25/13
STATE OF UTAH

UNLESS OTHERWISE SPECIFIED DIMENSIONS ARE IN INCHES TOLERANCES: ANGLES: ±1° FRACTIONS: ±1/16" DECIMALS: .XX ±.02 .XXX ±.005 INTERPRET DIM AND TOL PER ASME Y14.5-2009 DO NOT SCALE DRAWING	MODEL:		Harper International Corporation Lancaster, New York
	DWN BY:	DATE: 12/12/2012	TITLE NS-24D174-RTA-650
	CHKD BY:	DATE:	
	APPD BY:	DATE:	
	MFG:	DATE:	SIZE D · CAGE CODE 27334 · DRAWING NUMBER YRF-0097 · REV B
JOB HISTORY	THIRD ANGLE PROJECTION	ECCN EAR99	SCALE · WT · SHEET 7 OF 7

SOFTWARE: INVENTOR